Wadkin
BURSGREEN

M SERIES

T: 0116 2769111
F: 0116 2598138

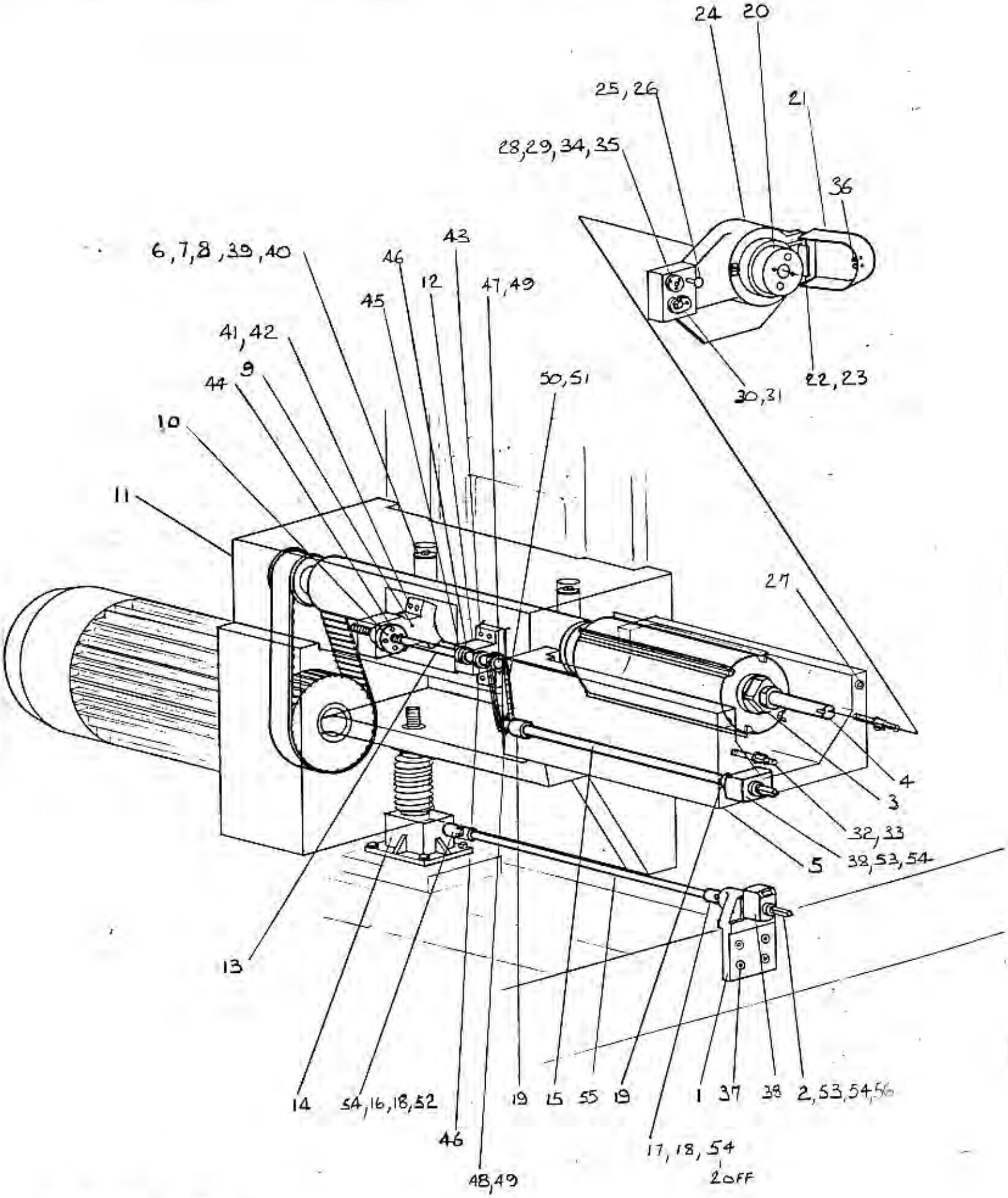

1. BOTTOM HEAD

1 BOTTOM HEAD

REF N°	DESCRIPTION	N° OFF
1	SCREW JACK ADJUSTMENT BRACKET	1 M23 01007
2	HEAD POSITIONING SHAFT	1 MX183
3	NUT FOR BOTTOM CUTTER SPINDLE	1 MX269
4	HORIZONTAL BOTTOM SPINDLE Ø50 300MM CAPACITY	1 MX72
5	BOTTOM HEAD CHIPGUARD	1 MX443
6	BOTTOM SLEEVE LOCKING BLOCK	2 M23 08113
7	TOP SLEEVE LOCKING BLOCK	2 M23 08114
8	SLEEVE LOCKING SCREW	2 M23 08115
9	SPINDLE SLEEVE HARNESS	1 M23 08007A
10	HARNESS NUT	1 M23 08008
11	L.H HEAD SLIDE (SHOWN)	1 M23 08001
	R.H HEAD SLIDE	1 M23 09001
12	BRACKET FOR ADJUSTING SCREW	1 M23 08006A
13	ADJUSTING SCREW	1 M23 09107
14	SCREW JACK	1
15	SPINDLE SLEEVE ADJUSTING SHAFT	1 M30 08100
16	UNIVERSAL JOINT WITH KEY WAY	1 MX552
17	UNIVERSAL JOINT " "	1 K30 37 126
18	GAITER FOR UNIVERSAL JOINTS	2 K30 37 190
19	OILITE BUSH Ø25mm X 25 LONG	2 FSD 11163
20	OUTBOARD BEARING ASSEMBLY	1 MX10000
21	OUT BOARD BEARING COVER	1 MX233
22	HINGE BRACKET	1 MX337
23	HINGE	1 MX336
24	CHIPGUARD COVER FOR BOTTOM HEAD	1 M23 13002
25	HANDLE STUD	2 M23 08112
26	BALL KNOB	2 IOOS 30 307
27	LOCATING BUSH	2 K30 06 '69
28	LOCATING PIN	2 K30 62 283
29	BUSH FOR LOCATING PIN	2 MX80
30	CAPTIVE 'C' WASHER WDS 403-206	2 K30 89 187
31	SHOULDER SCREW WDS 615-203	2 K30 72 874
32	STUD M16 x100mm LG	2 XXX 20334
33	COLLAR NUT WDS 404-206	2 K30 53240
34	HEXAGON SOCKET CAPSCREW M6 x 20 LG	3
35	TENSION PIN Ø 6 X20 LG	2
36	CATCH	1 K30 45 210
37	HEXAGON SOCKET CAP SCREW M10 X 35 LG	4
38	DIGITAL READOUT	2
39	DISC SPRING	2
40	SELF LOCKING NUT M16	2
41	HEXAGON SOCKET CAP SCREW M10 X 45 LG	4
42	SPRING WASHER M10	4
43	HEXAGON SOCKET CAP SCREW M10 X 20 LG	4
44	HEXAGON SOCKET CAP SCREW M6 X 20 LG	4
45	COLLAR 25 I/D 40 O/D	1
46	THRUST BEARING SKF & RHP 51105	2 K06 04134
47	CHAIN WHEEL ½ PITCH	1 M23 09106
48	CHAIN WHEEL ½ PITCH	1 M23 09102
49	TENSION PIN Ø 6 X 35LG	2
50	CHAIN ½ PITCH 24 PITCHES	1 K30 10 119

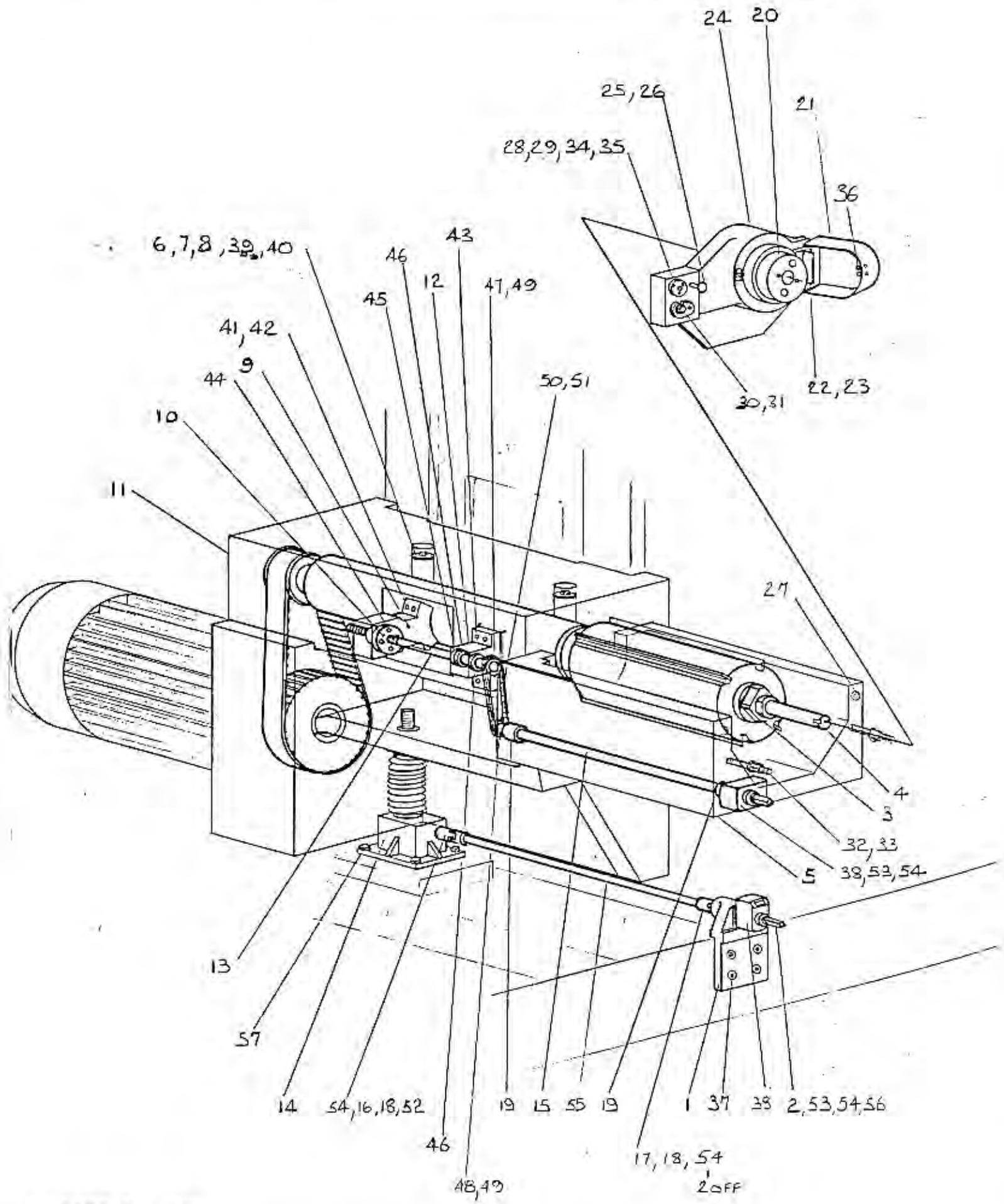

1. BOTTOM HEAD

1 BOTTOM HEAD (CONT)

REF	DESCRIPTION	N° OFF
51	CONNECTING LINK N°26	2 K3009 324
52	PARALLEL KEY 6 x 6 x 30	1 M2308105
53	COLLAR 20 I/D x 32 O/D	2
54	TENSION PIN ϕ6 x 30 LG	5
55	SCREW JACK ADJUSTEMENT SHAFT	1
56	OLITE BUSH 25 O/D x 20 I/D x 25	2
57	HEXAGON HEAD SETSCREW M12 x 40 LG.	4

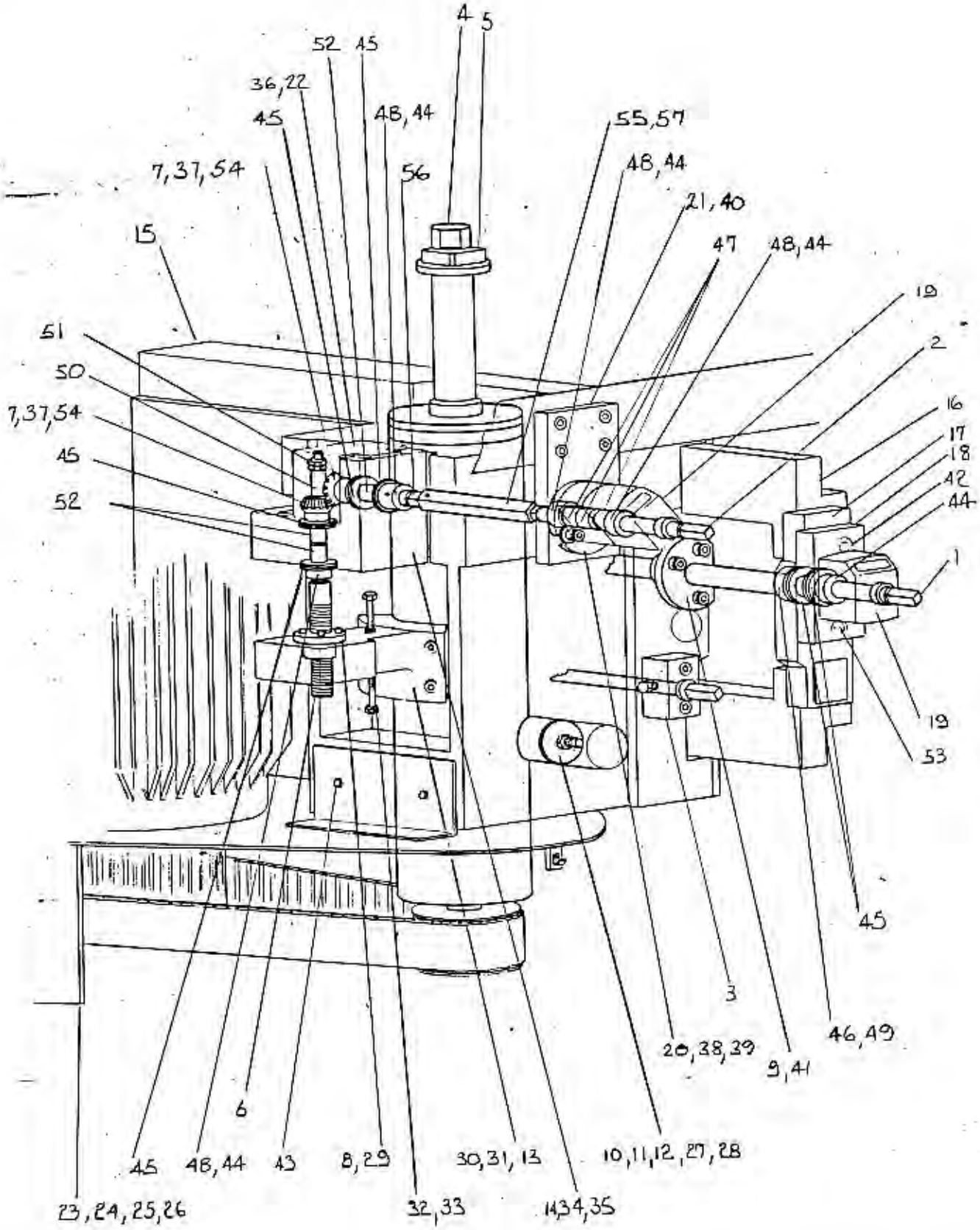

2. FENCE SIDE HEAD ADJUSTING MECHANISM

2 FENCE SIDE HEAD ADJUSTING MECHANISM

REF Nº	DESCRIPTION	Nº OFF
1	SIDE HEAD TRAVERSING SCREW	1 M23 12 106
2	SHAFT FOR RISE AND FALL ADJUSTMENT	1 M23 11 146
3	SEE SEPERATE ILLUSTRATION FOR MOTOR DRIVE BELT TENSIONING	
4	VERTICAL SPINDLE ASSEMBY ϕ 50	1 MX73
5	NUT FOR CUTTER SPINDLE	1 MX268
6	SCREW FOR SPINDLE RISE AND FALL	1 M23 11 112
7	STRAIGHT MITRE BEVEL GEAR	2 GA22
8	HARNESS NUT	1 M2308 008
9	SIDE HEAD TRAVESE NUT	1 M2312 007
10	TOP SLEEVE LOCKING BLOCK	2 M2308 114
11	BOTTOM SLEEVE LOCKING BLOCK	2 M2308 113
12	SLEEVE LOCKING SCREW	2 M23 08 115
13	SPINDLE SLEEVE HARNESS	1 M23 08 007A
14	BRACKET FOR F.S.H SPINDLE RISE AND FALL BEVELS	1 M23 11 111
15	FENCE SIDE HEAD BLOCK	1 M23 11 001
16	HORIZONTAL SLIDE	1 M23 12 006A
17	TRAVERSING SCREW KEEP PLATE	1 M23 12 008B
18	THRUST RACE COVER PLATE	1 M2312 107
19	DIGITAL READ OUT K30 25 430 REF	2 K30 25 407
20	BRACKET ADJUSTING SHAFT BEARING	1 GA 6283
21	BLOCK FOR FENCE SIDE HEAD RISE AND FALL ADJ SHAFT	1 M23 11 145
22	COVER FOR BEVEL GEARS	1 M23 11 113
23	SIDE HEAD DRIVE GUARD BOTTOM (NOT SHOWN)	1 MX2
24	SIDE HEAD DRIVE GUARD TOP R.H	1 MX50
25	CAMLOCK CATCH S1/L4/1/1BA	1 K30 45 201
26	CAMLOCK HOOK S1/L7/1/AA	1 K30 45 202
27	DISC SPRING	2
28	SELF LOCKING NUT M16	2
29	HEXAGON HEAD SET SCREW M6 X 20 LG	4
30	HEXAGON SOCKET CAP SCREW M10 X 45 LG	4
31	SPRING WASHER M10	4
32	LOCK NUT M10	2
33	HEXAGON HEAD SET SCREW M10	2
34	TENSION PIN ϕ 8	2
35	HEXAGON SOCKET CAP SCREW M10 X 80 LG	1
36	HEXAGON HEAD SET SCREW M6 X 12 LG	2
37	KEY 5 X 5 X 20	2
38	HEXAGON SOCKET CAP SCREW M8 X 16 LG	2
39	PLAIN WASHER M8	2
40	HEXAGON SOCKET CAP SCREW M8 X 20 LG	4
41	HEXAGON SOCKET CAP SCREW M10 X 30 LG	3
42	HEXAGON SOCKET CAP SCREW M12 X 45 LG	1
43	HEXAGON HEAD SET SCREW M6 X 12 LG	2
44	COLLAR I/D 20 O/D 32 X 14	5
45	THRUST BEARING SKF AND RHP 51105	4
46	COLLAR I/D 25 O/D 40 X 16	1
47	BRONZE BUSH 20 I/D 25 O/D X 15	3
48	TENSION PIN ϕ 6 X 32 LG	5
49	TENSION PIN ϕ 6 X 40 LG	1
50	SPACER FOR SIDE HEAD BEVEL	1 M23 11 116
51	LOCKNUT M16	2
52	BRONZE BUSH 20 I/D 25 O/D X 25	2

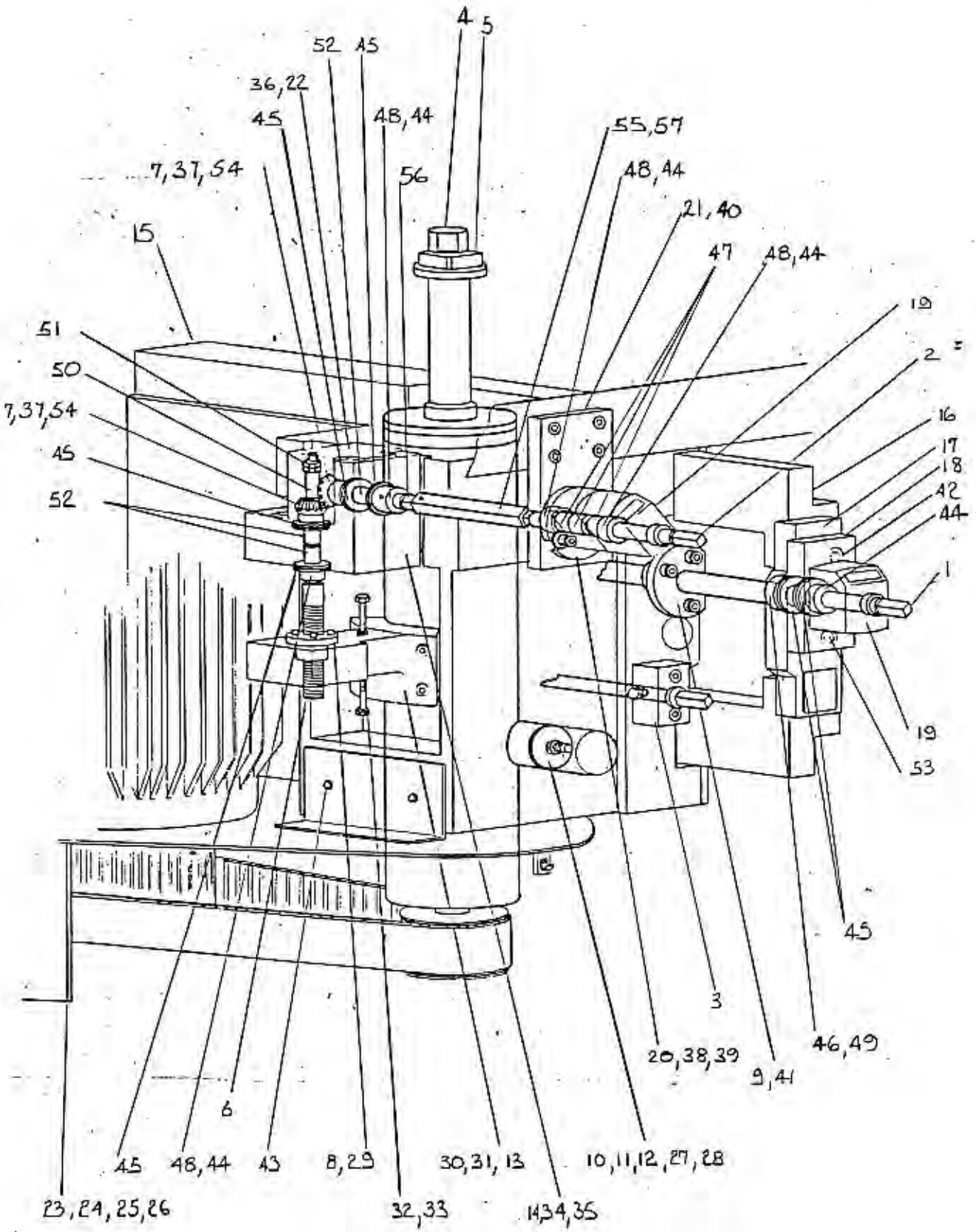

2. FENCE SIDE HEAD ADJUSTING MECHANISM *

2 FENCE SIDE HEAD ADJUSTING MECHANISM (CONT)

REF N°	DESCRIPTION	N° OFF
52	BRONZE BUSH 20 I D , 25 O/D X 15	1
53	HEXAGON SOCKET CAPSCREW M10 x 30 LG	2
54	HEXAGON SOCKET GRUBSCREW M6 x 6 LG	2
55	COUPLING TUBE FOR RISE AND FALL SHAFT	1 M2311 123.
56	SHAFT FOR RISE AND FALL BEVEL GEAR	1 M2311 114
57	TENSION PIN Ø6 x 20 LG	1

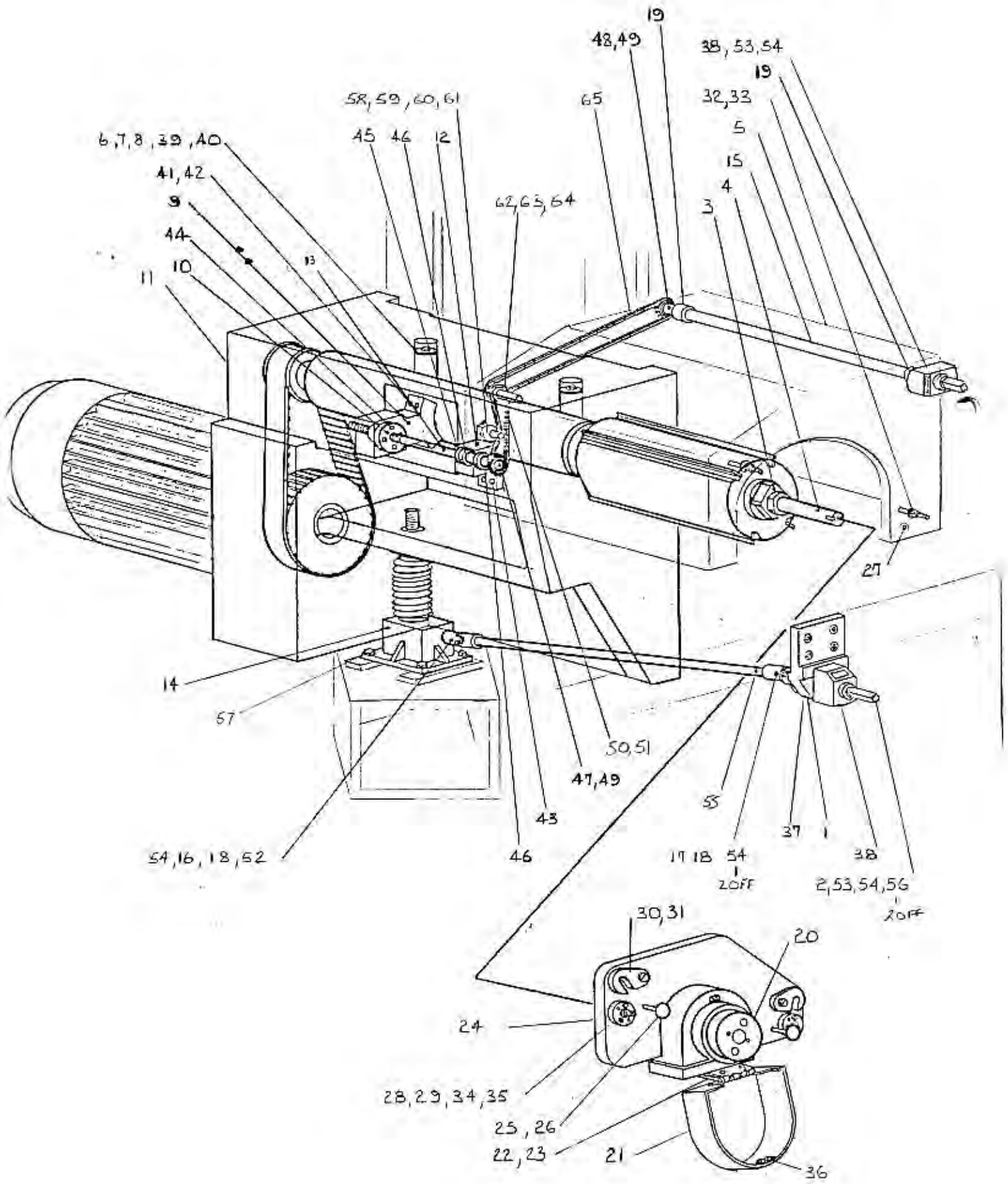
19
48,49
38,53,54
19
58,59,60,61
65
32,33
5
6,7,8,39,40
45 46 12
15
41,42
4
9
62,63,64
3
44
13
10
11
27
14
57
50,51
47,49
55
43
37
1
54,16,18,62
46
17 18 54
2 off
38
2,53,54,56
2 off
30,31
20
24
28,29,34,35
25,26
22,23
21
36

3 SECOND TOP HEAD

REF	DESCRIPTION	Nº OFF
1	SCREW JACK ADJUSTMENT BRACKET	1 M2301007
2	HEAD POSITIONING SHAFT	1 Mx183
3	NUT FOR TOP CUTTER SPINDLE	1 Mx262
4	HORIZONTAL TOP SPINDLE Ø50 300mm CAPACITY	1 Mx130
	HORIZONTAL TOP SPINDLE Ø50 230mm CAPACITY	1 Mx133
5	TOP HEAD CHIPGUARD 300mm CAPACITY	1 Mx113
	TOP HEAD CHIPGUARD 230 mm CAPACITY	1 M2309A101
6	BOTTOM SLEEVE LOCKING BLOCK	2 M2308113
7	TOP SLEEVE LOCKING BLOCK	2 M2308114
8	SLEEVE LOCKING SCREW	2 M2308115
9	SPINDLE SLEEVE HARNESS	1 M2308007A
10	HARNESS NUT	1 M2308008
11	L.H. HEAD SLIDE	1 M2308001
12	BRACKET FOR ADJUSTING SCREW	1 M2308006A
13	ADJUSTING SCREW	1 M2309107
14	SCREW JACK	1
15	SPINDLE SLEEVE ADJUSTING SHAFT	1 M30 08100
16	UNIVERSAL JOINT WITH KEY WAY	1 Mx552
17	UNIVERSAL JOINT	1 K30 37126
18	GAITER FOR UNIVERSAL JOINT	2 K3037140
19	OILITE BUSH 20 I/D x 25 O/D x 25 LG	2 FSW1163
20	OUTBOARD BEARING ASSEMBLY	1 Mx26000
21	OUTBOARD BEARING COVER	1 Mx333
22	HINGE PLATE	1 Mx318
23	HINGE	1 Mx336
24	CHIP GUARD COVER FOR TOP HEAD	1 M2309A102
25	HANDLE STUD	2 M2308112
26	BALL KNOB	2 K05 30507
27	LOCATING BUSH	2 K30 05 159
28	LOCATING PIN	2 K30 62 283
29	BUSH FOR LOCATING PIN	2 Mx80
30	CAPTIVE 'C' WASHER	2 K30 89 187
31	SHOULDER SCREW WDS 615-203	2 K30 72 879
32	STUD M16 x 100 LG	2
33	COLLAR NUT WDS 404-206	2
34	HEXAGON SOCKET CAP SCREW M6x20 LG	3
35	TENSION PIN Ø6 x 20 LG	2
36	CATCH	1 K30 45 210
37	HEXAGON SOCKET CAP SCREW M10 x 35 LG	4
38	DIGITAL READOUT	1
39	DISC SPRING	2
40	SELF LOCKING NUT M16	2

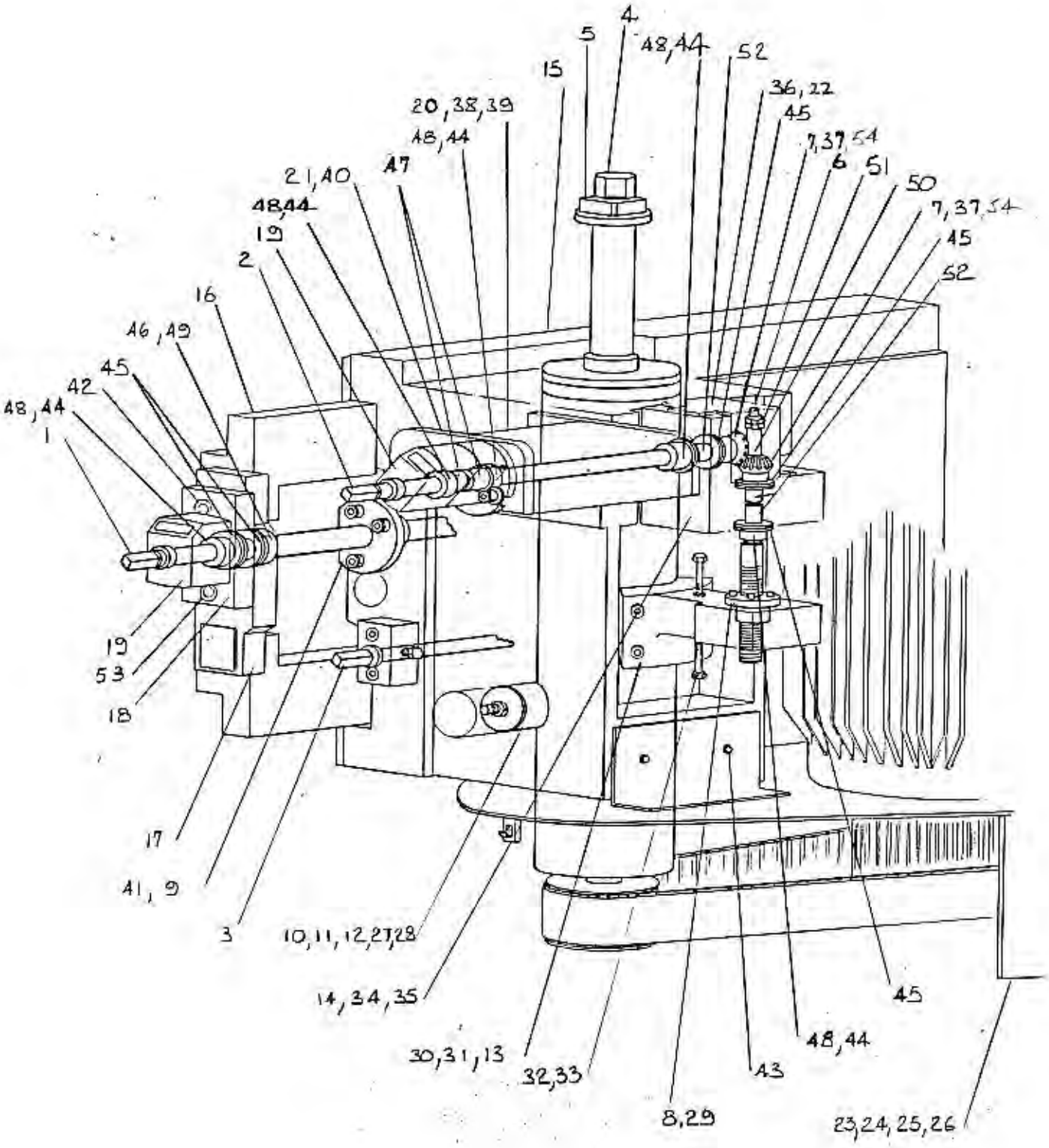

4. NEAR SIDE HEAD ADJUSTING MECHANISM

4 NEAR SIDE HEAD ADJUSTING MECHANISM

REF Nº	DESCRIPTION	Nº OFF
1	SIDE HEAD TRAVERSING SCREW	1 M23 12 106.
2	SHAFT FOR RISE AND FALL ADJUSTMENT	1 M23 11 147
3	SEE SEPERATE ILLUSTRATION FOR MOTOR DRIVE BELT TENSIONING	
4	VERTICAL SPINDLE ASSEMBY Ø 50	1 MX 131
5	NUT FOR COTTER SPINDLE	1 MX 269
6	SCREW FOR SPINDLE RISE AND FALL	1 M23 11 112
7	STRAIGHT MITRE BEVEL GEAR	2 GA 22
8	HARNESS NUT	1 M23 08 008
9	SIDE HEAD TRAVESE NUT	1 M23 12 007
10	TOP SLEEVE LOCKING BLOCK	2 M23 08 114
11	BOTTOM SLEEVE LOCKING BLOCK	2 M23 08 113
12	SLEEVE LOCKING SCREW	2 M23 08 115
13	SPINDLE SLEEVE HARNESS	1 M23 03 007A
14	BRACKET FOR N.S.H SPINDLE RISE AND FALL BEVELS	1 M23 11 110
15	NEAR SIDE HEAD BLOCK	1 M23 12 002
16	HORIZONTAL SLIDE	1 M23 12 006A
17	TRAVERSING SCREW KEEP PLATE	1 M23 12 008B
18	THRUST RACE COVER PLATE	1 M23 12 107
19	DIGITAL READ OUT K30 25 430 REF	2 K30 25 408
20	BRACKET ADJUSTING SHAFT BEARING	1 GA 6283
21	BRACKET FOR N.S.H RISE AND FALL ADJUSTMENT	1 M23 11 144
22	COVER FOR BEVEL GEARS	1 M23 11 113
23	SIDE HEAD DRIVE GUARD BOTTOM (NOT SHOWN)	1 MX2
24	SIDE HEAD DRIVE GUARD TOP	1 MX 45
25	CAMLOCK CATCH S1/L4/1/1AA	1 K30 45 201
26	CAMLOCK HOOK S1/L7/1/AA	1 K30 45 202.
27	DISC SPRING	2
28	SELF LOCKING NUT M16	2
29	HEXAGON HEAD SET SCREW M6 X 20 LG	4
30	HEXAGON SOCKET CAP SCREW M10 X 45 LG	4
31	SPRING WASHER M10	4
32	LOCK NUT M10	2
33	HEXAGON HEAD SET SCREW M10	2
34	TENSION PIN Ø 8	2
35	HEXAGON SOCKET CAP SCREW M10 X 80 LG	4
36	HEXAGON HEAD SET SCREW M6 X 12 LG	2
37	KEY 5 X 5 X 20	2
38	HEXAGON SOCKET CAP SCREW M8 X 16 LG	2
39	PLAIN WASHER M8	2
40	HEXAGON SOCKET CAP SCREW M 8 X 25 LG	4
41	HEXAGON SOCKET CAP SCREW M10 X 30 LG	3
42	HEXAGON SOCKET CAP SCREW M12 X 45 LG	1
43	HEXAGON HEAD SET SCREW M6 X 12 LG	2
44	COLLAR I/D 20 O/D 32 X 12	5
45	THRUST BEARING SKF AND RHP 51105	4
46	COLLAR I/D 25 O/D 40 X 16	1
47	BRONZE BUSH 20 I/D 25 O/D X 15	2
48	TENSION PIN Ø 6 X 32 LG	5
49	TENSION PIN Ø 6 X 40 LG	1
50	SPACER FOR SIDE HEAD BEVEL	1 M23 11 116
51	LOCKNUT M16	2
52	BRONZE BUSH 20 I/D 25 O/D X 25	2

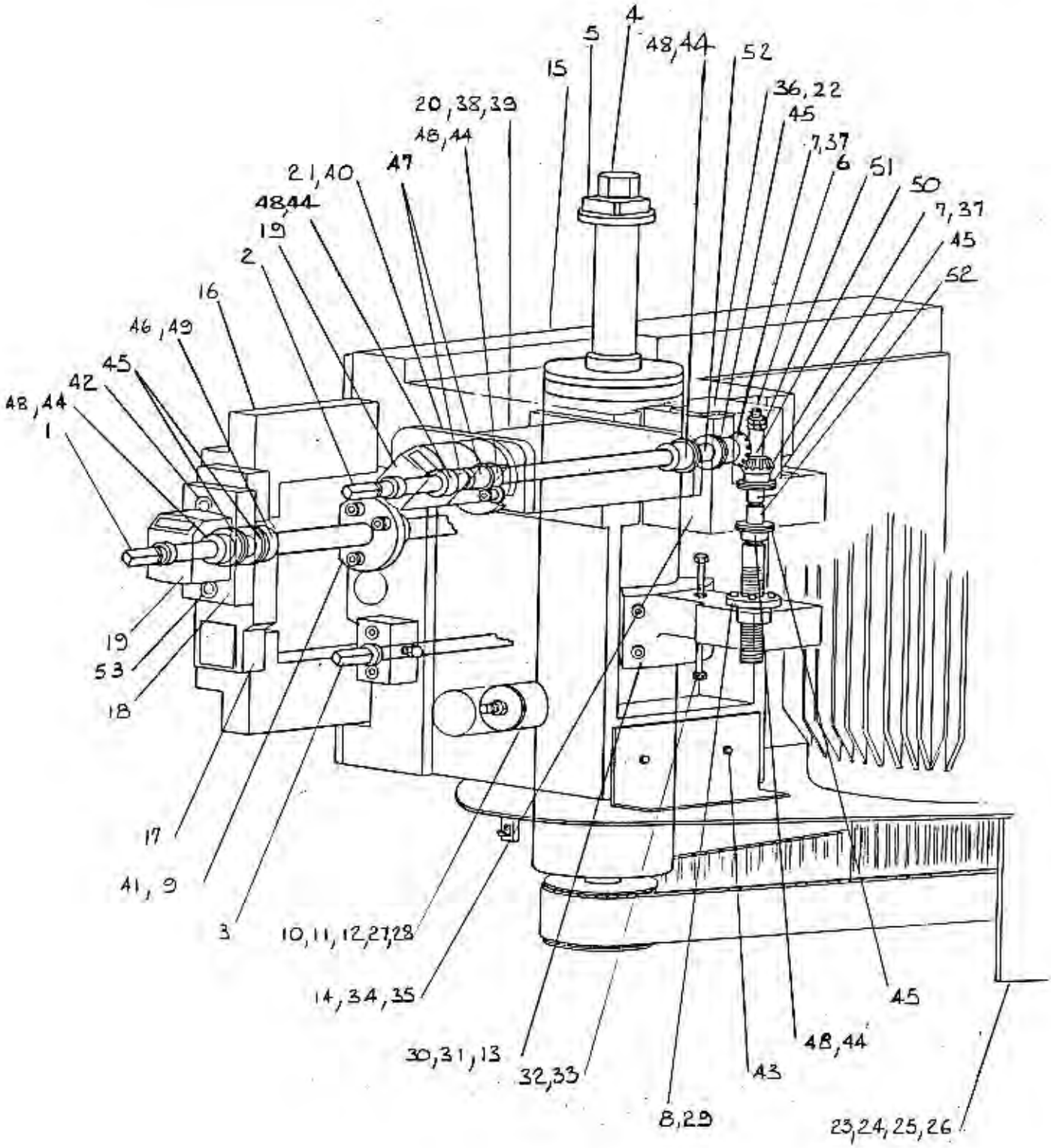

4. NEAR SIDE HEAD ADJUSTING MECHANISM

4 NEAR SIDE HEAD ADJUSTING MECHANISM (CONT)

REF N°	DESCRIPTION	N° OFF
52	BRONZE BUSH 20 I/D 25 O/D X15	2
53	HEXAGON SOCKET CAP SCREW M10 X30 LG	1
54	HEXAGON SOCKET GRUB SCREW M6 X 6LG	2

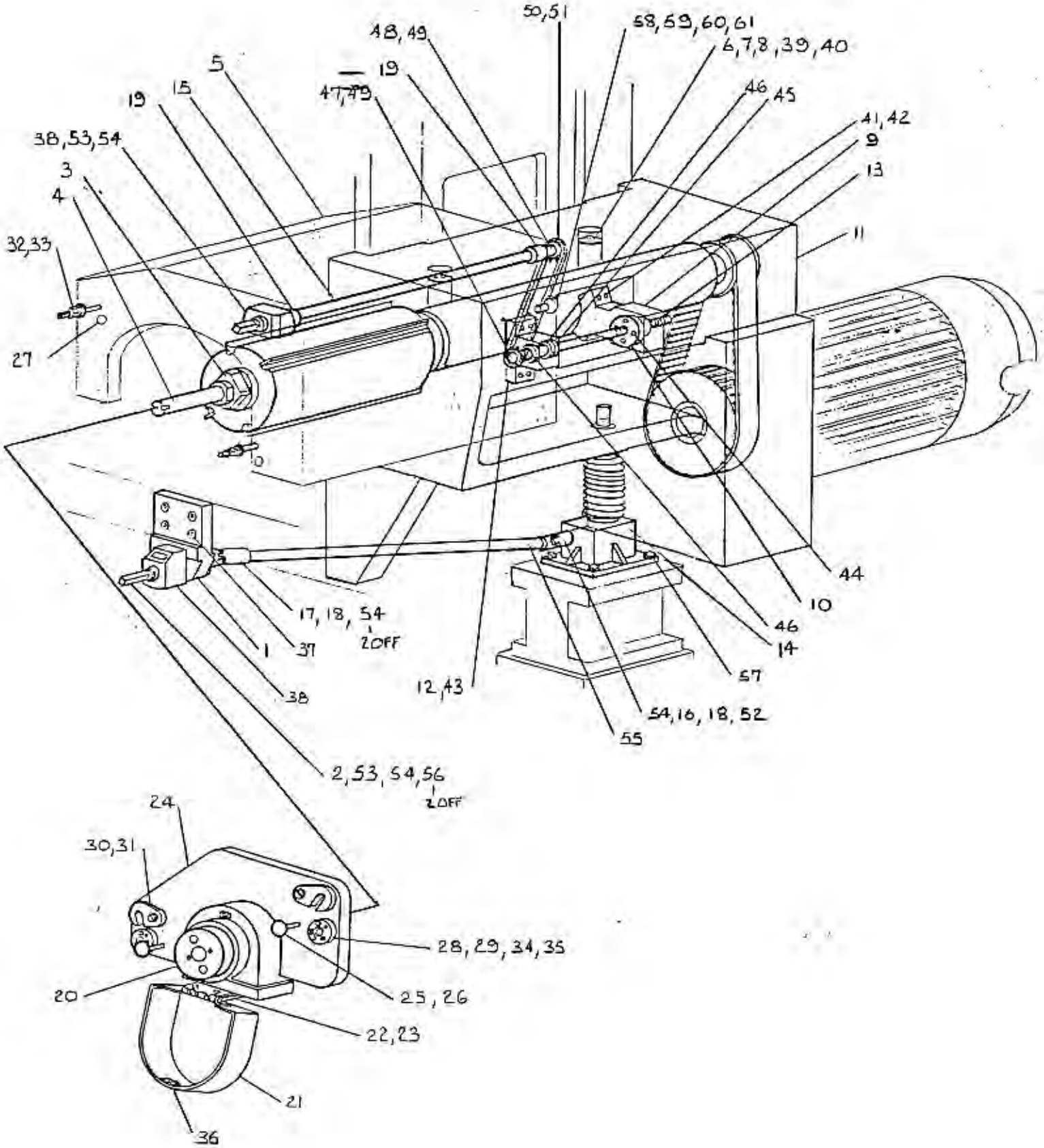
50,51
58,59,60,61
48,49
6,7,8,39,40
5
19
47,49
46
45
19
15
41,42
38,53,54
9
3
13
4
11
32,33
27
44
10
17,18,54
2 OFF
46
14
1
37
57
38
12,43
54,16,18,52
55
2,53,54,56
2 OFF
24
30,31
28,29,34,35
20
25,26
22,23
21
36

5 FIRST TOP HEAD

REF	DESCRIPTION	Nº OFF
1	SCREW JACK ADJUSTMENT BRACKET	1 M2301007
2	HEAD POSITIONING SHAFT	1 MX183
3	NUT FOR TOP CUTTER SPINDLE	1 MX268
4	HORIZONTAL TOP SPINDLE ϕ50 300mm CAPACITY	1 MX130
	HORIZONTAL TOP SPINDLE 050 230MM CAPACITY	1 MX133
5	TOP HEAD CHIPGUARD 300 MM CAPACITY	1 MX113
	TOP HEAD CHIPGUARD 230 MM CAPACITY	1 M2309A101
6	BOTTOM SLEEVE LOCKING BLOCK	2 M2308113
7	TOP SLEEVE LOCKING BLOCK	2 M2308114
8	SLEEVE LOCKING SCREW	2 M2308115
9	SPINDLE SLEEVE HARNESS	1 M2308007A
10	HARNESS NUT	1 M2308008
11	R.H HEAD SLIDE	1 M2309001
12	BRACKET FOR ADJUSTING SCREW	1 M2308006A
13	ADJUSTING SCREW	1 M2309107
14	SCREW JACK	1
15	SPINDLE SLEEVE ADJUSTING SHAFT	1 M3008100
16	UNIVERSAL JOINT WITH KEY WAY	1 MX552
17	UNIVERSAL JOINT	1 K30 37 126
18	GAITER FOR UNIVERSAL JOINT	2 K30 37 140
19	OILITE BUSH 20 I/D x25 O/D x25 LG	2 FSW 1163
20	OUTBOARD BEARING ASSEMBLY	1 MX200000
21	OUTBOARD BEARING COVER	1 MX333
22	HINGE PLATE	1 MX318
23	HINGE	1 MX336
24	CHIP GUARD COVER FOR TOP HEAD	1 M2309110L
25	HANDLE STUD	2 M2308112
26	BALL KNOB	2 K05 30 307
27	LOCATING BUSH	2 K05 05 154
28	LOCATING PIN	2 K30 62 283
29	BUSH FOR LOCATING PIN	2 MX80
30	CAPTIVE 'C' WASHER	2 K30 89 187
31	SHOULDER SCREW WDS 615-203	2 K30 72 874
32	STUD M16 X100 LG	2
33	COLLAR NUT WDS 404-206	2
34	HEXAGON SOCKET CAP SCREW M6X20 LG	3
35	TENSION PIN Ø6 X20 LG	2
36	CATCH	1 K30 45 210
37	HEXAGON SOCKET CAP SCREW M10 X35 LG	4
38	DIGITAL READOUT	1
39	DISC SPRING	2
40	SELF LOCKING NUT M16	2

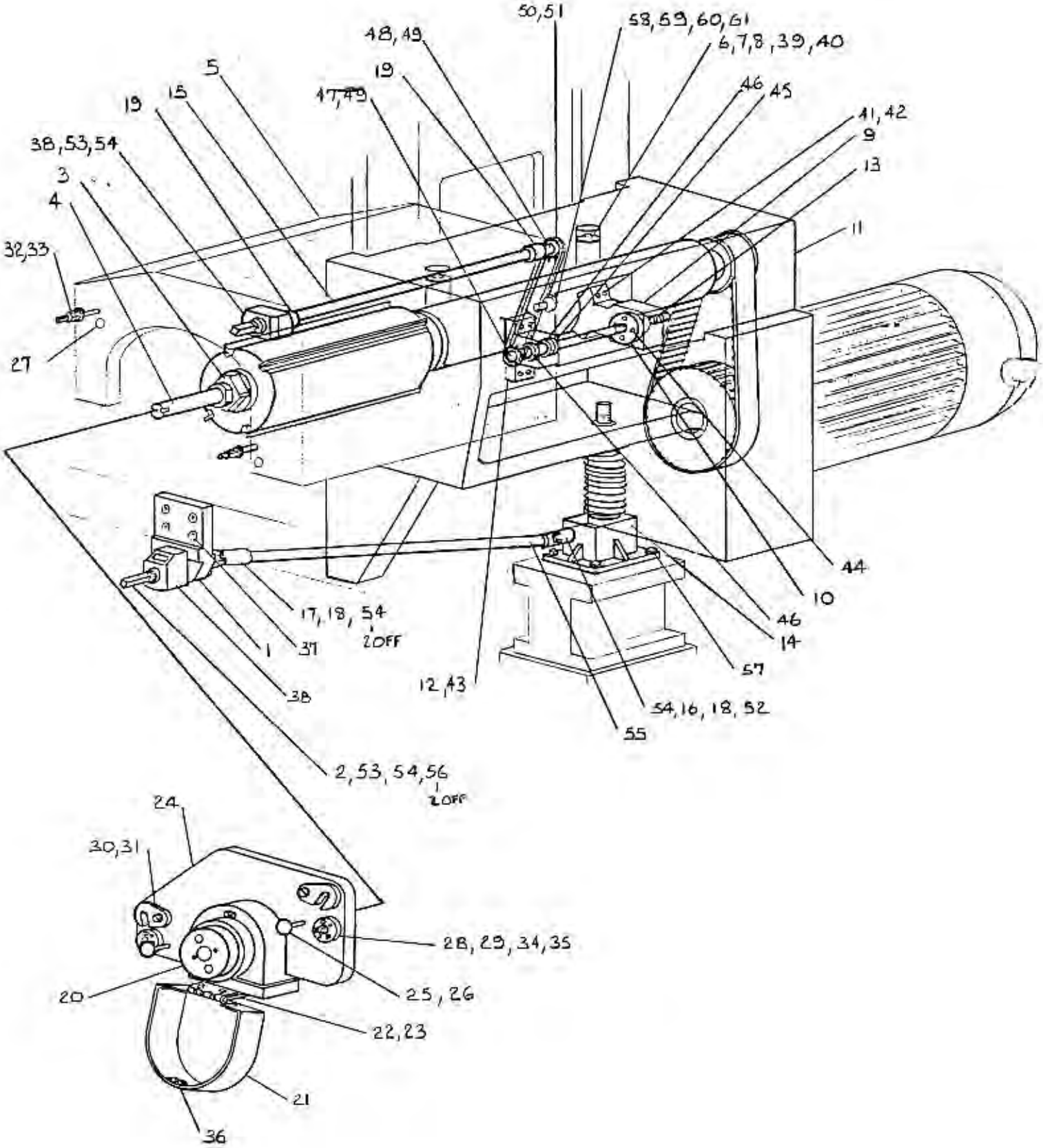
50,51
58,59,60,61
48,49
6,7,8,39,40
5
19
47,49
46
45
19
15
41,42
38,53,54
9
3
13
4
11
32,33
27
44
10
17,18,54
2OFF
46
14
1
37
57
12,43
38
54,16,18,52
55
2,53,54,56
2OFF
24
30,31
28,29,34,35
20
25,26
22,23
21
36

5 FIRST TOP HEAD (CONT)

REF	DESCRIPTION	N°OFF
41	HEXAGON SOCKET CAPSCREW M10 X 45 LG.	4
42	SPRING WASHER M10	4
43	HEXAGON SOCKET CAPSCEW M10 X 20 LG	4
44	HEXAGON — SOCKET CAPSCREW M 6 X 20 LG	4
45	COLLAR 25 I/D 40 O/D	1
46	THRUST BEARING , SKF & RHP 51105	2 K06004134
47	CHAIN WHEEL ½ PITCH	1 M2309106
48	CHAIN WHEEL ½ PITCH	1 M2309102
49	TENSION PIN Ø6 X35 LG	2
50	CHAIN: ½ PITCH 24 PITCHES	1
51	CONNECTING LINK N°26	2
52	PARRALLEL KEY 6 X 6 X 30	1 M2308105
53	COLLAR 20 I/D 32 O/D	2
54	TENSION PIN Ø6 X 30 LG	5
55	SCREW JACK ADJUSTEMENT SHAFT	1
56	OILITE BUSH 25 O/D X 20 I/D X 25	2
57	HEXAGON HEAD SETSCREW M12 X 40 LG	4
58	ECCENTRIC CHAIN TENSIONER	1 FOR 508L
59	STUD M12 X 60 LG	1
60	LOCK NUT M12	3
61	PLAIN WASHER M12	2

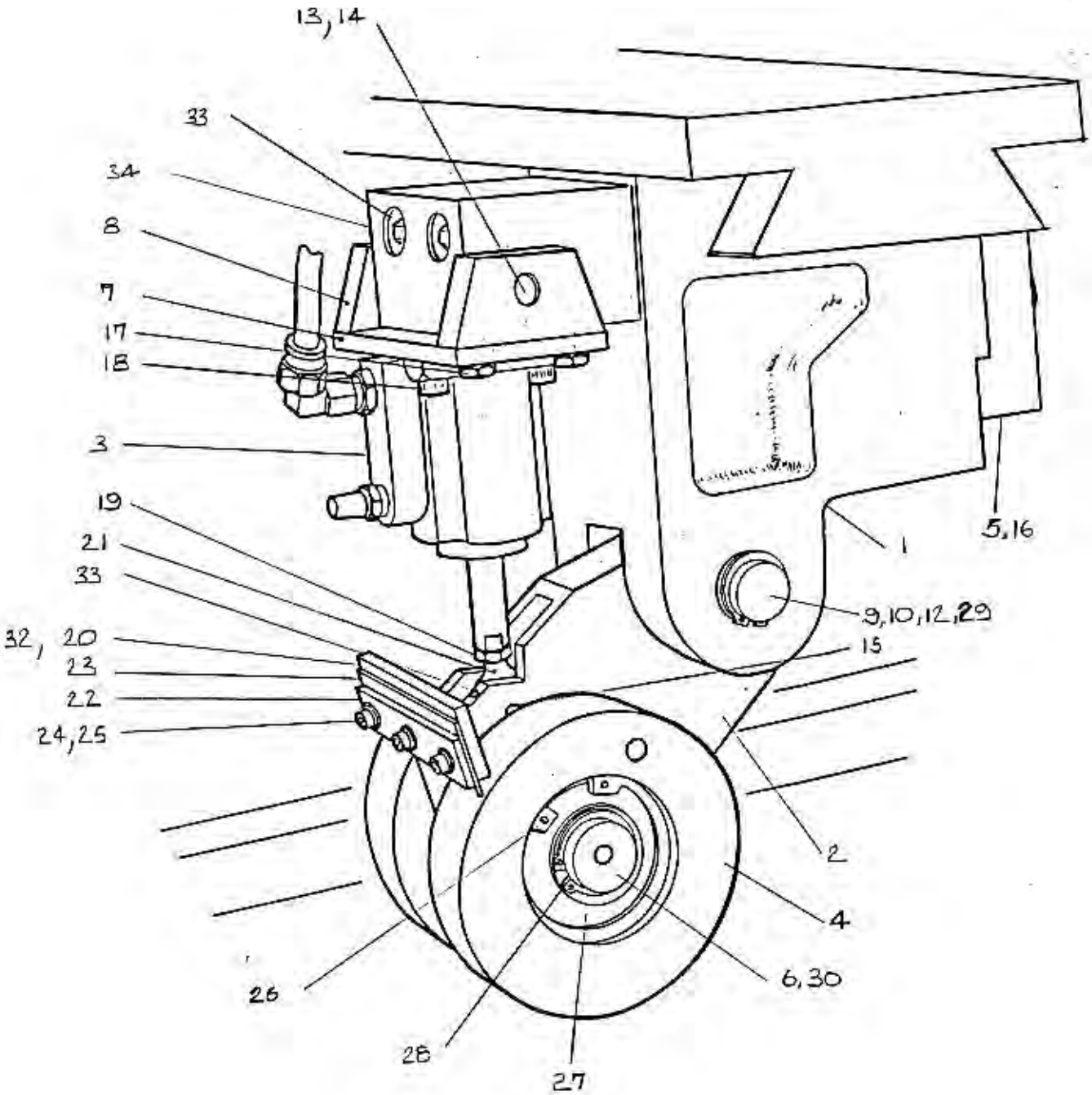

7. REVERSED PNEUMATIC TOP ROLLER PRESSURE

7. REVERSED PNEUMATIC TOP ROLLER PRESSURE

REF Nº	DESCRIPTION	Nº OFF
1	PRESSURE BLOCK	1 MX598
2	TOP PRESSURE SWIVEL PLATE	1 MX87
3	PNEUMATIC CYLINDER FESTO ADV-32-25	1 FSW 11 632
4	PRESSURE ROLLER	2 MLS 21004
5	CLAMP	1 MLS 21100
6	ROLLER SHAFT	1 MLS 21103
7	TOP PRESSURE CYLINDER PIVOT BRACKET	1 MX107
8	PIVOT BRACKET END PLATE	2 MX142
9	SWIVEL SHAFT	1 MLS 21 105
10	BRONZE BUSH 20 x 25 x 20	2
11	EXTENSION BLOCK	1
12	EXTERNAL CIRCLIP ϕ 20	2
13	TOP PRESSURE CYLINDER PIVOT PIN	1 MX108
14	HEXAGON SOCKET GRUB SCREW M4 x 8 LG	1
15	PIVOT PIN	1 MX109
16	HEXAGON HEAD SETSCREW M16 x 45 LG	1
17	HEXAGON HEAD SETSCREW M6 x 16 LG	4
18	HEXAGON SOCKET CAP SCREW M5 x 12 LG	4
19	HEXAGON LOCKNUT M6	1
20	SCRAPPER PLATE	1 MX 545
21	ROD END BEARING SKF SAK GESA	1 K30 37 138
22	SCRAPPER CLAMP	1 MX546
23	SCRAPPER	1 MX547
24	HEXAGON SOCKET CAP SCREW M4 x 8LG	3
25	PLAIN WASHER M4	3
26	INTERNAL CIRCLIP ϕ 52	2
27	BEARING SKF 6205-2RS	2 K06 01 207
28	EXTERNAL CIRCLIP ϕ25	2
29	HEXAGON SOCKET GRUB SCREW M8 x16 LG	1
30	HEXAGON SOCKET GRUB SCREW M8 x10 LG	1
31	HEXAGON SOCKET GRUB SCREW M4 x12 LG	1
32	HEXAGON SOCKET CAP SCREW M4 x 8 LG	2
33	HEXAGON SOCKET CAP SCREW M x 10 x 55 LG	2
34	EXTENSION BLOCK	1 MX 574

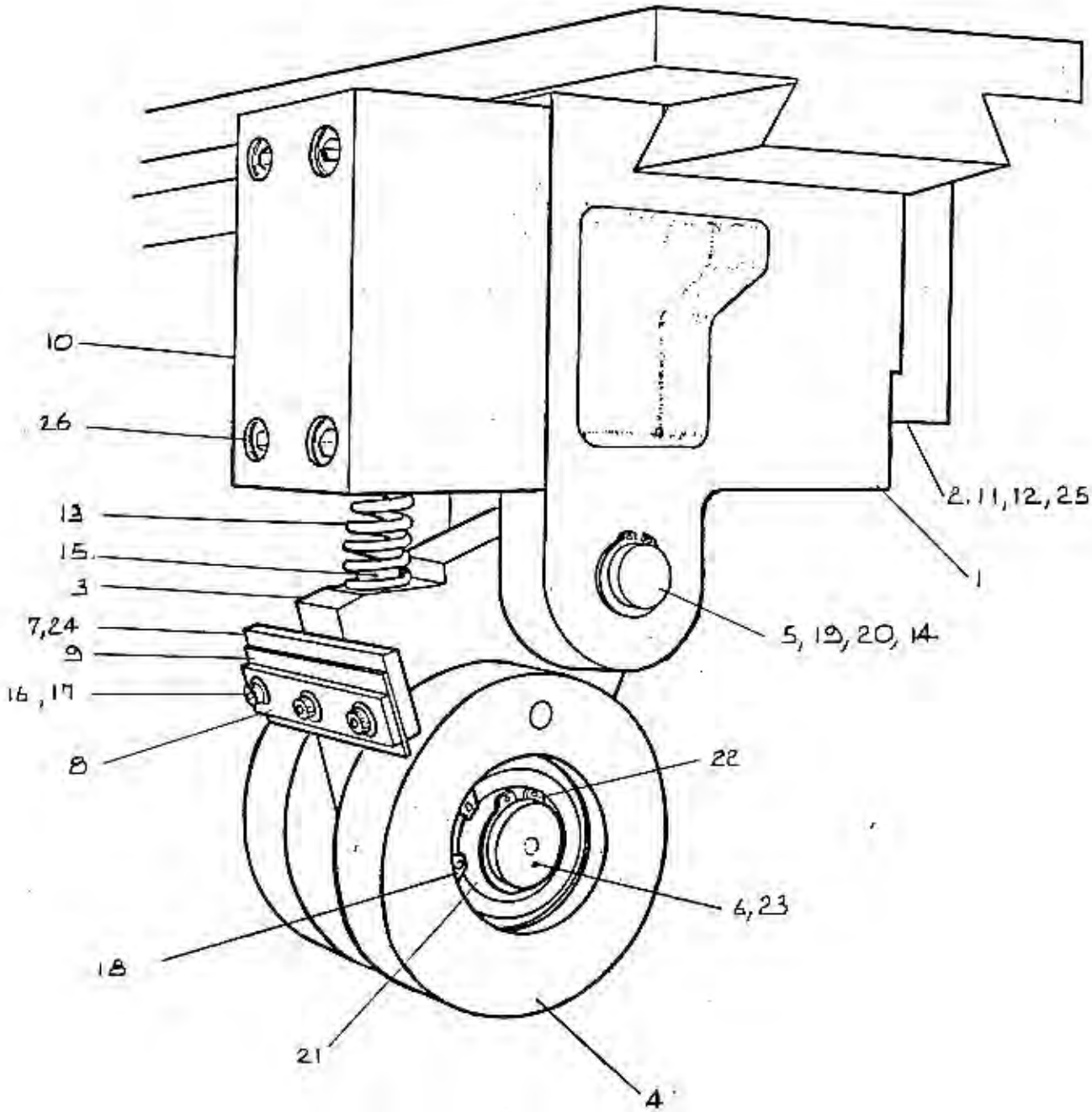

8. REVERSED TOP SPRING ROLLER PRESSURE

8 REVERSED TOP SPRING ROLLER PRESSURE

REF	DESCRIPTION	Nº OFF
1	PRESSURE BLOCK.	1 MX 598
2	CLAMP	1 M2321100
3	SWIVEL PLATE	1 M2321104A
4	PRESSURE ROLLER	2 M2321004
5	SWIVEL SHAFT	1 M2321105.
6	ROLLER SHAFT	1 M2321103
7	SCRAPPER PLATE	1 MX545
8	SCRAPPER CLAMP	1 MX546
9	SCRAPPER	1 MX547
10	SPRING RETAINING BLOCK	1 MX506.
11	PLAIN WASHER M16	1
12	SPRING WASHER M16	1
13	SPRING	1
14	EXTERNAL CIRCLIP ϕ20	2 FSW01330
15	HEXAGON SOCKET CAP SCREW M8 X 10 LG	1
16	HEXAGON SOCKET CAP SCREW M4 X 8 LG	3
17	PLAIN WASHER M4	3
18	INTERNAL CIRCLIP ϕ52	2
19	BRONZE BUSH 20X25X20	2
20	HEXAGON SOCKET GRUBSCREW M8 X 16 LG	1
21	BEARING SKF 6205-2RS	2 K0601207
22	EXTERNAL CIRCLIP ϕ25	2
23	HEXAGON SOCKET GRUBSCREW M8 X 10 LG	1
24	HEXAGON SOCKET CAPSCREW M4 X 8 LG	2
25	HEXAGON HEADED SETSCREW M16 X 50 LG	1
26	HEXAGON SOCKET CAPSCREW M10 X 55 LG	4

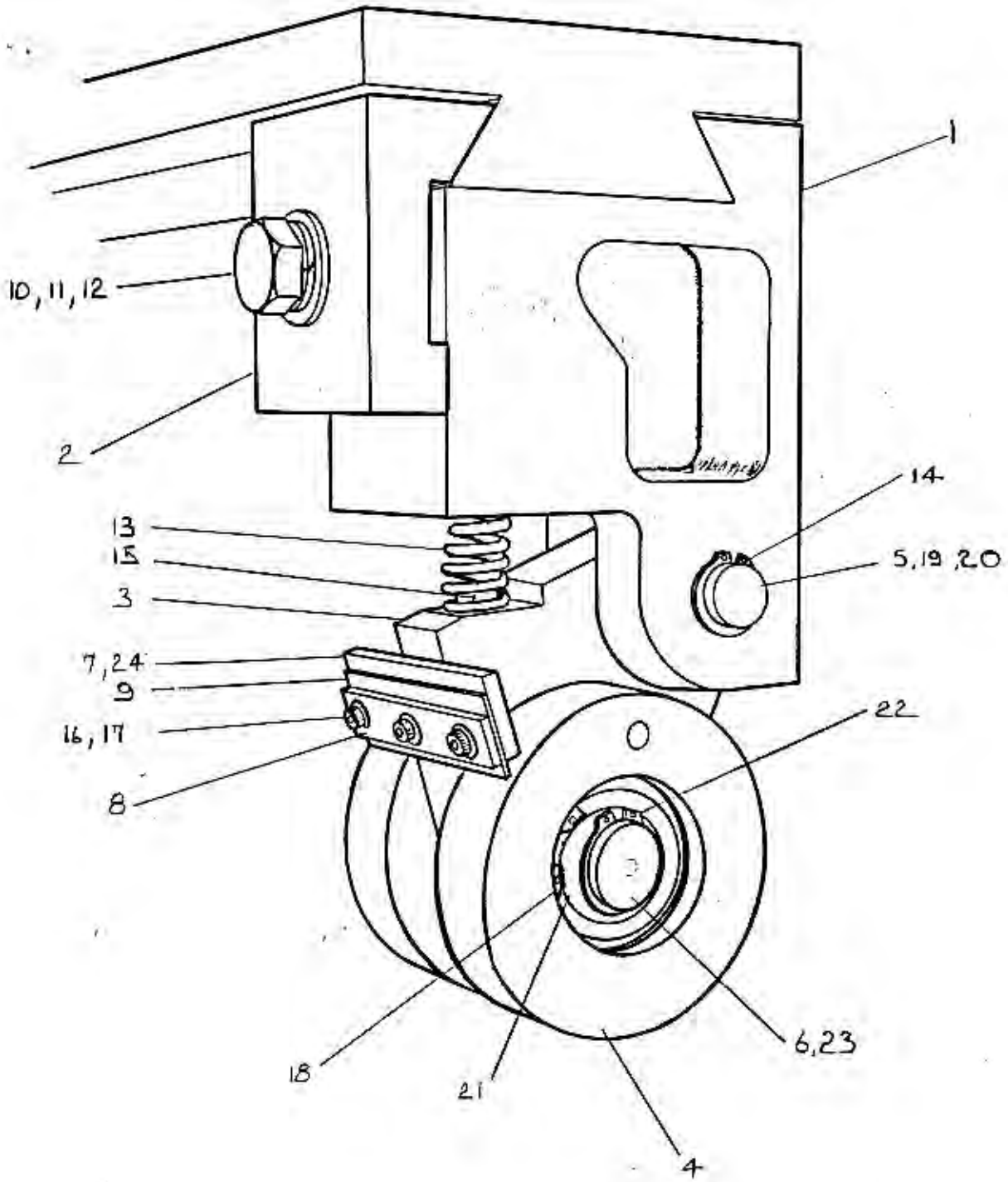

FIG 9 TOP SPRING ROLLER PRESSURE

9 TOP SPRING ROLLER PRSSURE

REF	DESCRIPTION	Nº OFF
1	PRESSURE BLOCK.	1 MZ21003
2	CLAMP	1 MZ3 21 100
3	SWIVEL PLATE	1 MZ3 21 104A
4	PRESSURE ROLLER	2 MLS 21 004
5	SWIVEL SHAFT	1 MZS 21 105
6	ROLLER SHAFT	1 MZ3 21 103
7	SCRAPPER PLATE	1 MX 545
8	SCRAPPER CLAMP	1 MX 546
9	SCRAPPER	1 MX 547
10	HEXAGON HEADED SETSCREW M16 X 50 LG	1
11	PLAIN WASHER M16	1
12	SPRING WASHER M16	1
13	SPRING	1 FSW 01330
14	EXTERNAL CIRCLIP ϕ 20	2
15	HEXAGON SOCKET CAP SCREW M8 X 10 LG	1
16	HEXAGON SOCKET CAP SCREW M4 X 8 LG	3
17	PLAIN WASHER M4	3
18	INTERNAL CIRCLIP ϕ 52	2
19	BRONZE BUSH 20 X 25 X 20	2
20	HEXAGON SOCKET GRUBSCREW M8 X 16 LG	1
21	BEARING SKF 6205 -2RS	2 KW6 01 207
22	EXTERNAL CIRCLIP ϕ 25	2
23	HEXAGON SOCKET GRUBSCREW M8 X 10 LG	1
24	HEXAGON SOCKET CAPSCREW M4 X 8 LG	2

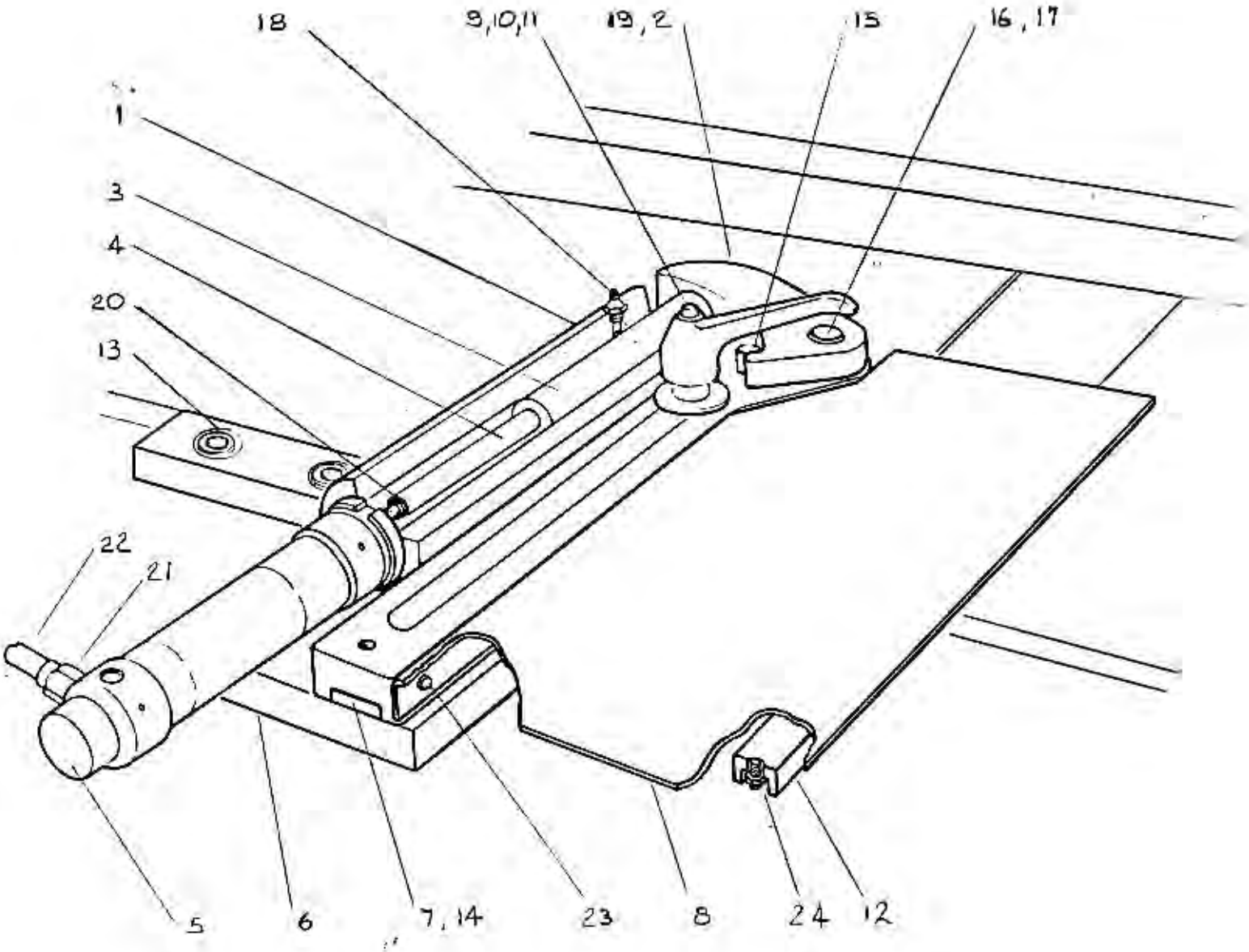

10. PNEUMATIC SIDE PRESSURE
AFTER 1ST BOTTOM HEAD

10. PNEUMATIC SIDE PRESSURE
AFTER 1ST BOTTOM HEAD

REF Nº	DESCRIPTION	Nº OFF	
1	SIDE PRESSURE BRACKET	1	MX-152
2	ROLLER LINK	1	FB 2972
3	PLUNGER	1	FB 2592
4	PISTON ROD EXTENSION	1	MX 143
5	PNEUMATIC CYLINDER FESTO ESW-32-50	1	K3063 720
6	SUPPORT BRACKET	1	MX425
7	TENON	1	MX414
8	GUARD OVER 1ST BOTTOM HEAD	1	MX403
9	STUD M12 X 60 LONG	1	KOS 26 298
10	LARGE PLAIN WASHER M12	1	KOS 28 114
11	FEMALE BRISTOL HANDLE M12	1	K3029 904
12	SUPPORT STRIP	1	MX404
13	HEXAGON SOCKET CAP SCREW M12 X25 LONG	3	KOS 25 230
14	HEXAGON SOCKET COUNTER SUNK SCREW M8 X 25 LONG	2	KOS 25 334
15	PLAIN DOWEL Ø 12 X 40 LONG	1	KOS 29 173
16	BRONZE BUSH 25 x 20 x 15	1	KOS 31 540
17	PIVOT PIN	1	FB 2593
18	GREASE NIPPLE 1/8" E S P	1	KOS 50 104
19	TAPER PIN	1	KOS 20507
20	HEXAGON LOCKNUT M10	1	KOS 27 110
21	STRAIGHT MALE TO TUBE CONNECTOR 1/8" BSP – Ø 6 BORE	1	
22	PLASTIC TUBE		
23	HEXAGON HEAD SETSCREW M6 x 12 LONG	3	KOS 25 561
24	HEXAGON LOCKNUT M6	3	KOS 27 108

11. PNEUMATIC INFEED SIDE PRESSURE

REF Nº	DESCRIPTION	Nº OFF	
1	SIDE PRESSURE BRACKET	1	MX152
2	ROLLER LINK	1	FB 2972
3	PLUNGER	1	FB 2592
4	PISTON ROD EXTENSION	1	MX 143
5	PNEUMATIC CYLINDER FESTO ESW-32-50	1	K30 63 720
6	SUPPORT BRACKET	1	M30 16002
7	TEE SLIDE	1	MX440
8	BLOCK FOR TEE BOLT	1	MX482
9	STUD M12 x 70 LONG	1	K05 26300
10	LARGE PLAIN WASHER M12	1	K05 28 114
11	FEMALE BRISTOL HANDLE M12	1	K30 29 904
12	TENSION PIN 4MM X 26 LONG	1	K05 20 484
13	HEXAGON SOCKET CAPSCREW M10 X 25MM LONG	2	K05 25 209
14	HEXAGON SOCKET CAPSCREW M10 X 16MM LONG	2	K05 25 207
15	PLAIN DOWEL Ø12 X 40MM LONG	1	K05 29 173
16	BRONZE BUSH 25 X 20 X 15	1	K05 31 540
17	PIVOT PIN	1	FB 2593
18	GREASE NIPPLE 1/8 B.S.P	1	K09 50 104
19	TAPER PIN	1	K05 20 507
20	HEXAGON LOCKNUT M10	1	K05 27 110
21	STRAIGHT MALE TO TUBE CONNECTOR 1/8 BSP - Ø6 BORE		
22	PLASTIC TUBE		

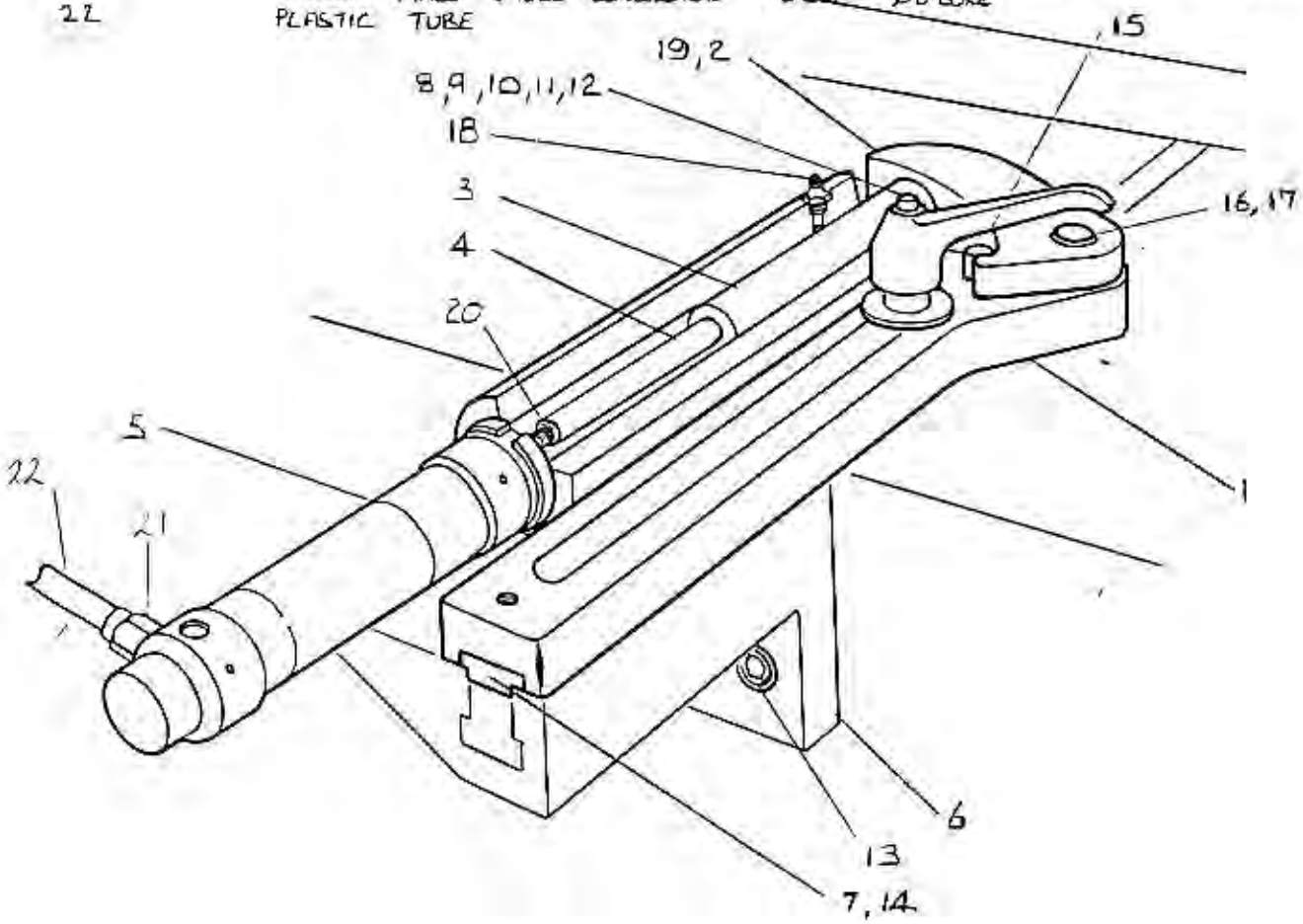

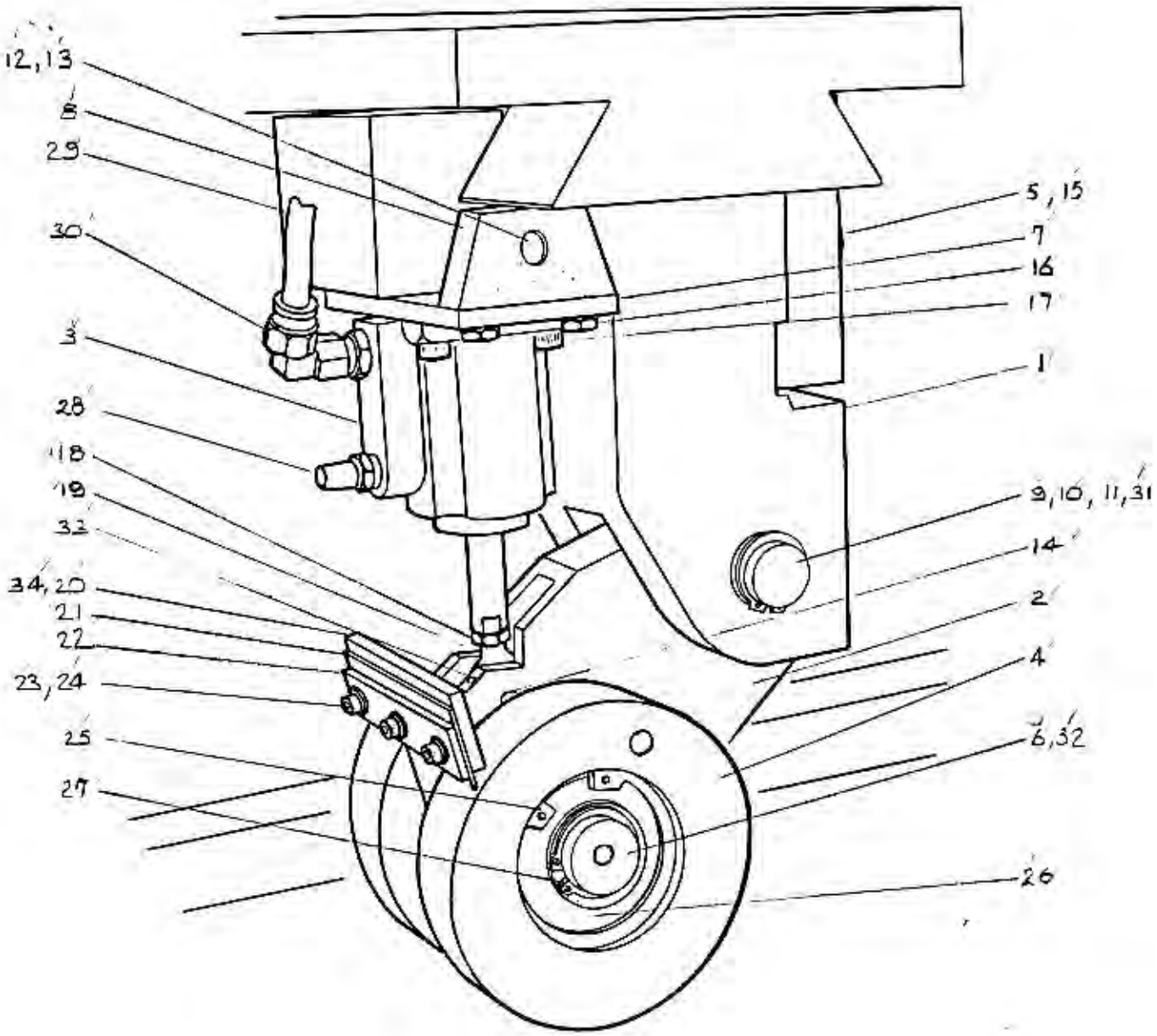

FIG 12 PNEUMATIC TOP ROLLER PRESSURE

12. TOP PNEUMATIC ROLLER PRESSURE

REF Nº	DESCRIPTION	Nº OFF	
1	PRESSURE BLOCK	1	M23 21A 001
2	TOP PRESSURE SWIVEL PLATE	1	Mx87
3	PNEUMATIC CYLINDER FESTO ADV-32-25	1	FSW 11 632
4	PRESSURE ROLLER	2	M23 21004
5	CLAMP	1	M23 21 100
6	ROLLER SHAFT	1	M23 21 103
7	TOP PRESSURE CYLINDER PIVOT BRACKET	1	Mx107
8	PIVOT BRACKET END PLATE	2	Mx 142
9	SWIVEL SHAFT	1	M23 21 105
10	BRONZE BUSH 20 x 25 x 20	2	K05 31 564
11	EXTERNAL CIRCLIP 20MM	2	K20 09 276
12	TOP PRESSURE CYLINDER PIVOT PIN	1	Mx108
13	HEXAGON SOCKET GRUB SCREW M4 x 8 LONG	1	K30 72 827
14	PIVOT PIN	1	Mx109
15	HEXAGON HEAD SETSCREW M16X 45MM LONG	1	K05 25 560
16	HEXAGON HEAD SETSCREW M6 x 16 MM LONG	4	K05 25 502
17	HEXAGON SOCKET CAP SCREW M5 x 12 MM LONG	4	K05 25 143
18	HEXAGON LOCKNUT M6	1	K05 27 108
19	ROD END BEARING SKF SAK GESA	1	K30 37 138
20	SCRAPER PLATE	1	Mx 545
21	SCRAPER CLAMP	1	Mx 546
22	SCRAPER	1	Mx 547
23	HEXAGON SOCKET CAP SCREW M4 x 8MM LONG	3	K05 25 137
24	M4 PLAIN WASHER	3	K05 28 100
25	INTERNAL CIRCLIP 52MM	2	K20 09 144
26	BEARING SKF 6205 - 2RS	2	K06 01 207
27	EXTERNAL CIRCLIP 25MM	2	K30 09 141
28		1	
29	PLASTIC TUBE 4MM BORE		
30		1	
31	HEXAGON SOCKET GRUB SCREW M8 x 16 LONG	1	K05 26 127
32	HEXAGON SOCKET GRUB SCREW M8 x 10 LONG	1	K05 26 125
33	HEXGON SOCKET GRUB SCREW M4 x 12 LONG	1	K30 72 860
34	HEXAGON SOCKET CAP SCREW M4 x 8LONG	2	K05 25 137

13. JOINTERS :- GENERAL ASSEMBLEY

REF	DESCRIPTION	Nº OFF	
1	DRIVE COVER	1	*
2	MOTOR MOUNTING PLATE	1	*
3	JOINTER SLIDE	1	*
4	TRAVERSE SCREW	1	*
5	SADDLE	1	M23 39A 119
6	WEAR STRIP FOR JOINTER TRAVERSE	1	M23 39A 122
7	SCREW FOR JOINTER FEED	1	M23 39A 106
8	NUT FOR TRAVERSE SCREW	1	M23 39A 109
9	SLIDE FOR JOINTER FEED	1	M23 39A 101
10	WEAR STRIP FOR JOINTER FEED	1	M23 39A 108
11	CYLINDER BLOCK	1	M23 39A 104
12	PISTON	1	M23 39A 103
13	CYLINDER BLOCK CAP	1	M23 39A 105
14	TIE JOINT MOUNTING PLATE	1	MX 147
15	ARM FOR RACHET PAWL	1	M23 39A 107
16	BLOCK FOR PAWL SPRING	1	M23 39A 112
17	PAWL	1	M23 39A 111
18	ADAPTOR FOR JOINTER RACHET	1	MX 148
19	KNOB FOR JOINTER	1	MX 149
20	SQUARE DRIVE ADAPTOR	1	FDR 11188
21	PLUNGER FOR JOINTER RACHET	1	MX 146
22	PLAIN WASHER M6	2	K05 28 102
23	SELF LOCKING NUT M6	4	K05 27 151
24	HPC TIMING PULLEY 72 TEETH 1/5 PITCH 1/2" BORE	1	K30 78609
25	HPC TIMING PULLEY 72 TEETH 1/5 PITCH Ø 14 BORE	1	K30 78608
26	HEXAGON SOCKET GRUB SCREW M5 X 8 LONG	1	K05 26 102
27	HEXAGON SOCKET CAPSCREW M6 X 20 LONG	4	K05 25 166
28	PLAIN WASHER M6	4	K05 28 102
29	STUD M6 X 55 LONG	2	K05 26 210
30	HEXAGON SOCKET CAPSCREW M6 X 16 LONG	4	K05 25 165
31	THRUST WASHER INA AS 2035	3	K06 102 52
32	THRUST BEARING INA AXK 2035	1	K06 102 12
33	HEADED BRONZE BUSH 26 O/D X 20 I/D X 15 LONG	1	K05 31 331
34	HEXAGON LOCKNUT M20 X 2.5	2	K05 27 113
35	HEXAGON SOCKET CAP SCREW M6 X 20 LONG	3	K05 25 166
36	PLAIN WASHER M6	3	K05 28 102
37	HEXAGON SOCKET CAPSCREW M6 X 50 LONG	1	K05 25 172
38	HEXAGON SOCKET CAPSCREW M6 X 30 LONG	2	K05 25 168
39	HEXAGON SOCKET GRUBSCREW M6 X 25 LONG	3	K05 26 118
40	HEXAGON LOCKNUT M6	3	K05 27 108
41	HEXAGON SOCKET GRUBSCREW M6 X 16 LONG	3	K05 26 116
42	HEXAGON LOCKNUT M6	3	K05 27 108
43	HEXAGON SOCKET CAPSCREW M6 X 20 LONG	3	K05 25 166

CONT OVER

* WHEN ORDERING SPARE PARTS STATE MACHINE TYPE (XM230 OR XM300) & POSITION OF JOINTER I.E 1ST BOTTOM HEAD.

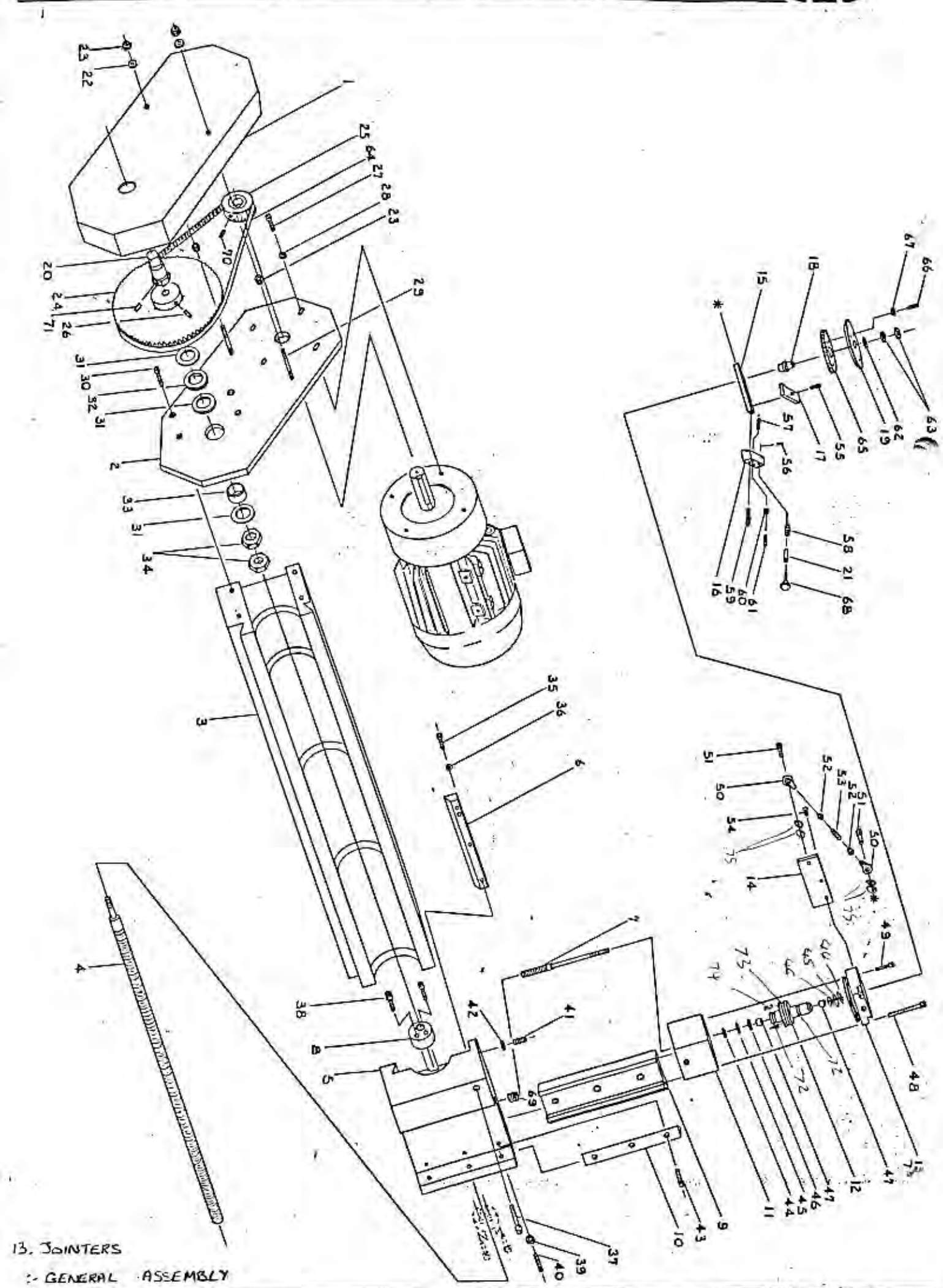

13. JOINTERS

:- GENERAL ASSEMBLY

13. JOINTERS : GENERAL ASSEMBLEY CONT

REF	DESCRIPTION	Nº OFF	
44	THRUST WASHER INA LS1024	2+	K06102 04
45	THRUST BEARING INA AXK 1024	2+	K06102 03
46	THRUST WASHER INA AS 1024	2+	K06102 02
47	BRONZE BUSH 10 X 14 X 10	2	K05 31 513
48	HEXAGON SOCKET CAPSCREW M6 X 30 LONG	2	K05 25 178
49	HEXAGON SOCKET CAPSCREW M6 X 20 LONG	2	K05 25 166
50	ROD END BEARING M6 SKF SI6 E	2	K30 37 135
51	HEXAGON SOCKET CAPSCREW M6 X 12 LONG	2	K05 25 164
52	HEXAGON LOCKNUT M6	2	K05 27 108
53	HEXAGON SOCKET GRUBSCREW M6 X 25 LONG	1	K05 26 118
54	HEXAGON SOCKET C'SUNK SCREW M6 X 16 LONG	2	K05 25 325
55	HEXAGON SOCKET CAPSCREW M8 X 25 LONG	1	K05 25 188
56	TENSION PIN Ø3 X 10 LONG	1	K05 20 478
57	COMPRESSION SPRING ETS 30	1	K30 73 943
58	COMPRESSION SPRING ETS 90	1	K30 73 472
59	HEXAGON SOCKET CAPSCREW M6 X 35 LONG	2	K05 25 169
60	HEXAGON LOCKNUT M8	1	K05 27 109
61	HEXAGON SOCKET GRUBSCREW M8 X 40 LONG	1	K05 26 132
62	PLAIN WASHER M10	1	K05 28 104
63	HEXAGON LOCKNUT M10	2	K05 27 110
64	TIMING BELT 210 XL 037 TIMING BELT 310 XL 037 (1ST BTM HD ONLY)	1	* K30 78 455 K30 78
65	GEAR RATCHET RELIANCE R16 S20-48	1	K30 25 255
66	HEXAGON SOCKET GRUBSCREW M6 X 16 LONG	3	K05 26 116
67	HEXAGON LOCKNUT M6	3	K05 27 108
68	CAPTIVE SCREW WDS 521-204 X 15 LONG	1	K30 72 844
69	HELICAL COIL INSERT M12 X 12 LG	1	K30 33 121
70	HEXAGON SOCKET GRUBSCREW M3 X 6 LONG	1	K30 72 858
71	TENSION PIN Ø5 X 20 LONG	1	K05 20 547
72	'O' RING GACO BS 4518 0195-30	2	K30 69 283
73	'O' " " RMO 405-30	2	K30 69 280
74	TENSION PIN Ø6	2	K05 20 524
75	PLAIN WASHER M6	4	

1 M23 39A 125 1ST BTM
M23 39A 121 ALL OTHER JOINTERS
2 M23 39A 124 1st BTM
M23 39A 120 ALL OTHER JOINTERS
3 M x 99 M300 TOP HD.
M23 39A 123 M230 BTM HD.
M x 98 M300 BTM HD.
M23 39A 100 M230 TOP HD.
4 M x 100 M300 HORIZONTAL JOINTERS.
M23 39A 118 M230 HORIZONTAL "

* WHEN ORDING SPARE PARTS STATE MACHINE TYPE. (xM230 OR xM300) & POSITION OF JOINTER I.E 1ST BOTTOM HEAD

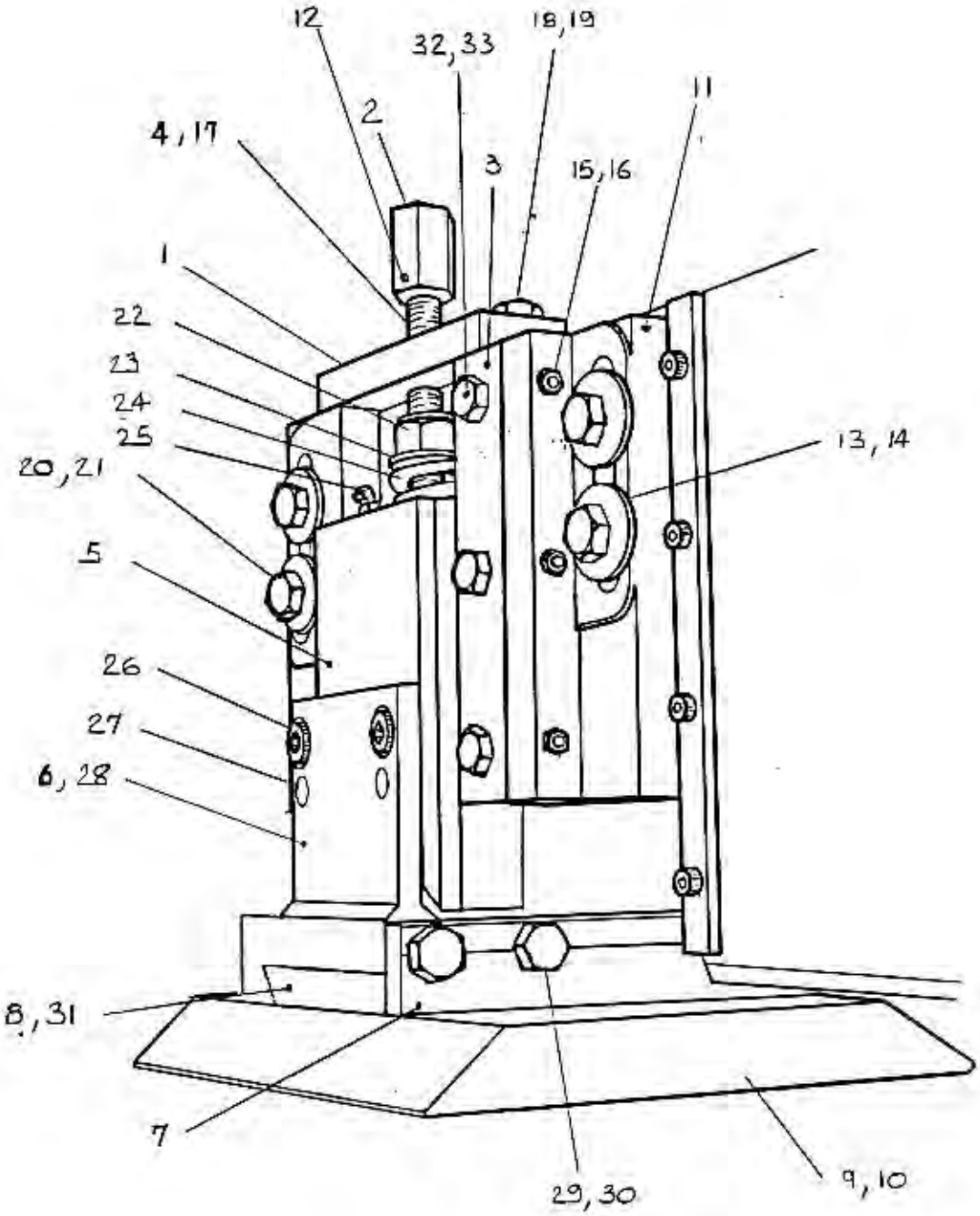

14. STRAIGHT PAD PRESSURE ON 1ST TOP HEAD.

14 STRAIGHT PAD PRESSURE 1ST TOP HEAD

REF Nº	DESCRIPTION	Nº OFF
1	PLATE FOR ADJUSTING SCREW	1 M23 19 101
2	NUT FOR CHIPBREAKER SPRING SCREW	1 M23 19 103
3	KEEP PLATE FOR PRESSURE SLIDE	1 M23 19 102
4	ADJUSTING SCREW	1 M23 19 100
5	SLIDE FOR TOP HEAD PRESSURE	1 M23 19A 001
6	DOVE TAIL BRACKET	1 MX 283
7	CLAMP PLATE FOR PAD PRESSURE DOVETAIL	1 MX 293
8	DOVE TAIL PLATE	1 MX 290
9	PAD PRESSURE WIDE	1 MX 292
10	PAD PRESSURE NARROW	1 MX 291
11	SLIDEWAY FOR PRESSURE	1 M23 19 002
12	TENSION PIN ϕ6 x 24 LONG	1 KOS 20 522
13	HEXAGON SETSCREW M12 X 40 LONG	2 KOS 25 546
14	PLAIN WASHER M12	2 KOS 28 105
15	HEXAGON SOCKET GRUBSCREW M6 X 30 LONG	3 KOS 26 119
16	HEXAGON LOCKNUT M6	3 KOS 27 108
17	HEXAGON LOCKNUT M12	2 KOS 27 111
18	HEXAGON SETSCREW M10 X 35 LONG	2 KOS 25 532
19	SPRING WASHER M10	2 KOS 28 155
20	HEXAGON SETSCREW M12 X 70 LONG	2 KOS 25 551
21	PLAIN WASHER M12	2 KOS 28 105
22	HEXAGON SELF LOCKING NUT M16	1 KOS 27 154
23	PLAIN WASHER M16	1 KOS 28 106
24	SPRING	1 FSW 02397
25	GREASE NIPPLE	2 KO9 50 105
26	HEXAGON SOCKET CAP SCREW M10 X 20 LONG	2 KOS 25 208
27	DOWEL M10 X 20 LONG	2 KOS 29 156
28	HEXAGON SOCKET CAPSCREW M10 X 25 LONG	2 KOS 25 209
29	HEXAGON SETSCEW M12 X 30 LONG	3 KOS 25 544
30	PLAIN WASHER M12	3 KOS 28 105
31	COUNTERSUNK HEXAGON SOCKET SCREW M12 X 25	4 KOS 25 353
32	HEXAGON SET SCREW M10 X 35 LONG	3 KOS 25 532
33	SPRING WASHER M10	3 KOS 28 155.

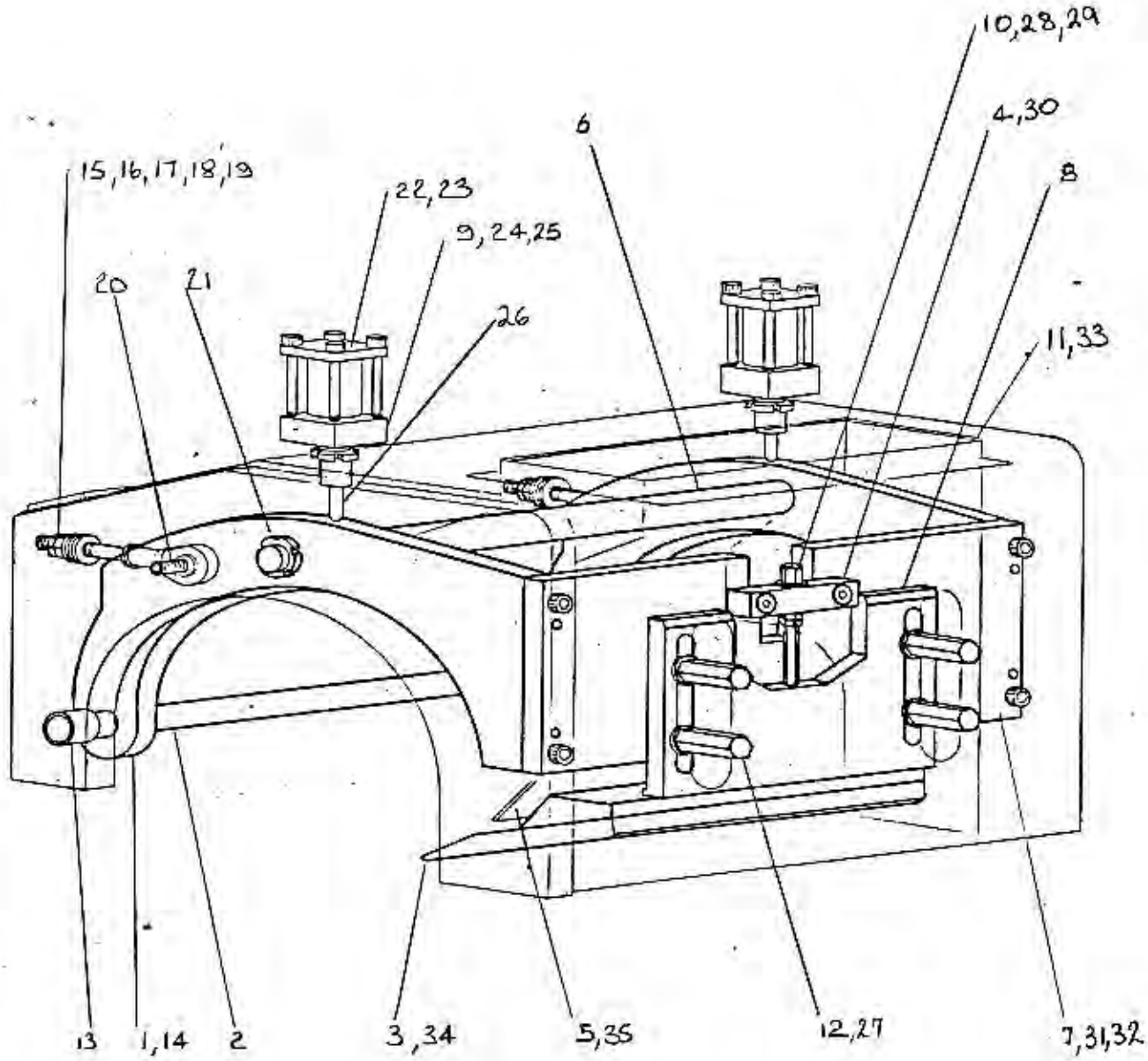

15. TOP HEAD CHIP BREAKER.

15 TOP HEAD CHIPBREAKER

REF	DESCRIPTION		Nº OFF
1	ARM FOR TOP HEAD CHIPBREAKER		2 MX116
2	SHAFT FOR CHIPBREAKER ARM PIVOT	MX300	1 MX121
	SHAFT FOR CHIPBREAKER ARM PIVOT	MX230	1
3	SHOE FOR TOP HEAD CHIPBREAKER	MX300	1 MX119
	SHOE FOR TOP HEAD CHIPBREAKER	MX230	1 M2309A110
4	BLOCK FOR CHIPBREAKER ADJUSTING SCREW		1 M2309A115
5	DEFLECTOR FOR TOP HEAD	MX300	1 MX120
	DEFLECTOR FOR TOP HEAD	MX230	1 M2309A111
6	SHAFT FOR SPACING CHIPBREAKER ARMS	MX300	1 MX122
	SHAFT FOR SPACING CHIPBREAKER ARMS	MX230	1
7	PLATE FOR MOUNTING SHOE CARRIER	MX300	1 MX114
	PLATE FOR MOUNTING SHOE CARRIER	MX230	1 M2309A108
8	CARRIER FOR CHIPBREAKER SHOE	MX300	1 MX115
	CARRIER FOR CHIPBREAKER SHOE	MX230	1 M2309A109
9	BLOCK FOR MOUNTING CYLINDER		2 M2309A104
10	SCREW FOR CHIPBREAKER ADJUSTMENT		1 M2309A116
11	INNER HOOD	MX300	1 MX118
	INNER HOOD	MX230	1 M2309A113
12	LOCKING NUT		4 MX184
13	PLAIN BRONZE BUSH 25 I/D, 30 O/D, 25 LG		2
14	HEXAGON SOCKET GRUB SCREW M10 X 16 LG		2
15	STUD M12 X 95		2
16	HEXAGON NUT M12		2
17	HEXAGON LOCK NUT M12		2
18	DISC SPRING WASHER 12.2 I/D, 25 O/D X 0.9		BK3073987
19	ROD END SKF SIK 12 ESA		2 K5037137
20	HEXAGON SOCKET CAP SCREW M12 X 35 LG		2
21	NOTCH NUT M24		2
22	HEXAGON SOCKET CAP SCREW M6 X 65 LG		8
23	FESTO SINGLE ACTING CYLINDER AVL-32-25		2 K3063721
24	NOTCH NUT M30		2
25	PLAIN BRONZE BUSH 20 I/D, 25 O/D, 25 LG		2
26	PLUNGER		2 M2309A114
27	SPRING WASHER M12		4
28	PLAIN WASHER M12		1
29	HEXAGON LOCK NUT M12		2
30	HEXAGON SOCKET CAP SCREW, M12 X 25 LG		2
31	HEXAGON SOCKET CAP SCREW M12 X 35 LG		4
32	TENSION PIN Ø8 X 32 LG		4
33	HEXAGON SET SCREW M6 X 10 LG		4
34	HEXAGON SOCKET CAP SCREW M8 X 20 LG		4
35	HEXAGON SET SCREW M6 X 12 LG		2

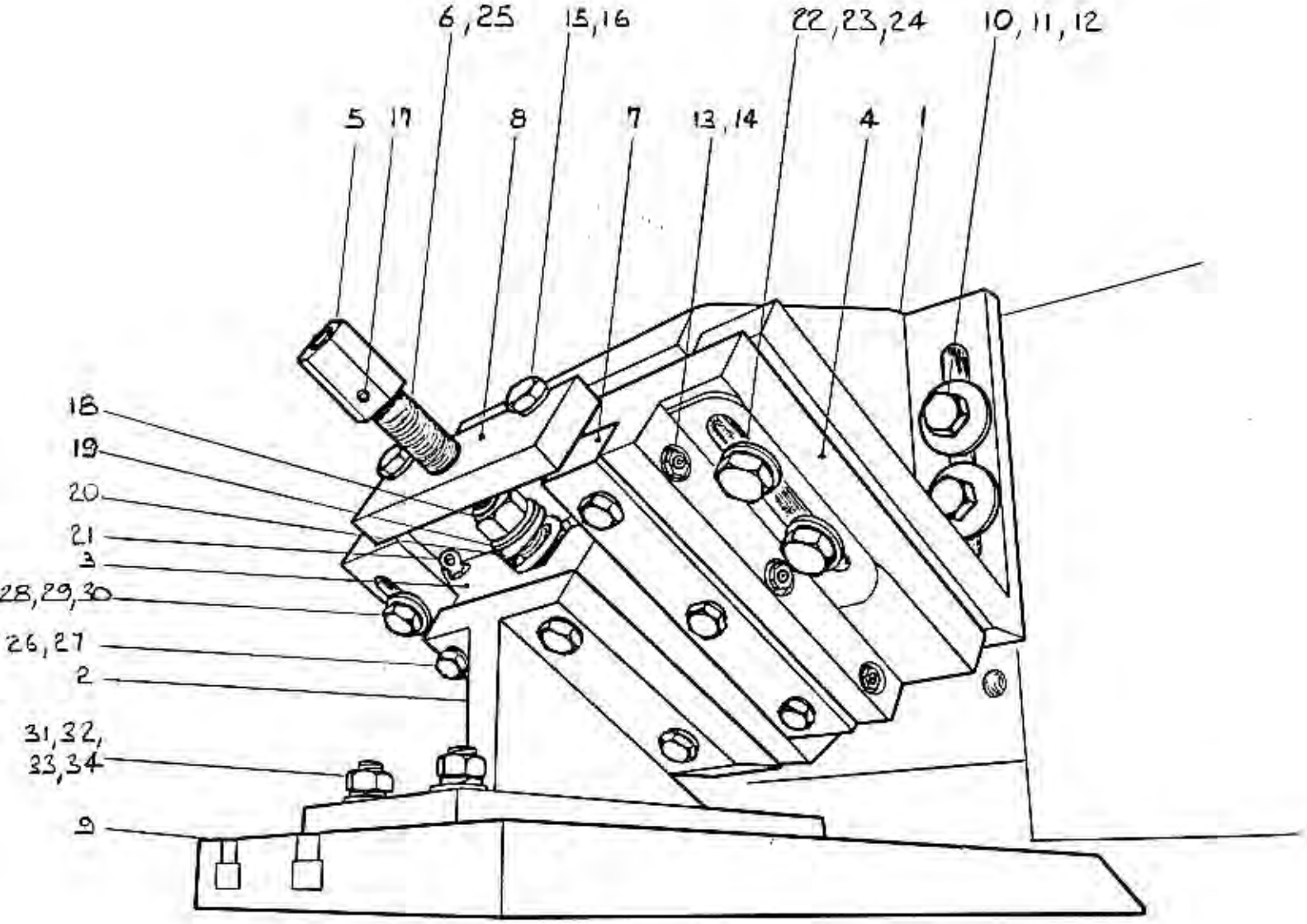

16. INCINED TOP PRESSURE ON 2ND TOP HEAD

16. INCLINED TOP PRESSURE ON 2ND TOP HEAD

REF	DESCRIPTION	Nº OFF	
1	MOUNTING BRACKET FOR TOP HEAD PRESSURE	1	M2319A100
2	MOUNTING BRACKET FOR TOP HEAD PRESSURE PAD	1	M2319A101
3	SLIDE FOR INCLINED TOP HEAD PRESSURE	1	M2319A001
4	SLIDE WAY FOR PRESSURE	1	M2319002
5	NUT	1	M2319 103
6	ADJUSTING SCREW	1	M2319 100.
7	KEEP PLATE	1	M2319 102
8	TOP PLATE	1	M2319 101
9	PAD	1	MX 125
10	HEXAGON SETSCREW M12 x 40 LONG	4	KOS 25 546
11	PLAIN WASHER M12	4	KOS 28 105
12	SPRING WASHER M12	4	KOS 28 156
13	HEXAGON SOCKET GRUBSCREW M6 x 30 LONG	3	KOS 26 119
14	HEXAGON LOCKNUT M6	3	KOS 27 108
15	HEXAGON SETSCREW M10 x 35 LONG	2	KOS 25 532
16	SPRING WASHER M10	2	KOS 28 155
17	TENSION PIN Ø6 x 24 LONG	1	KOS 20 522
18	HEXAGON SELF LOCKING NUT M16	1	KOS 27 154
19	PLAIN WASHER M16	1	KOS 28 106
20	SPRING	1	FSW 02397
21	GREASE NIPPLE	2	KO9 50 105
22	HEXAGON SETSCREW M12 X 40 LONG	2	KOS 25 546
23	PLAIN WASHER M12	2	KOS 28 105
24	SPRING WASHER M12	2	KOS 28 156
25	HEXAGON LOCKNUT M12	2	KOS 27 111
26	HEXAGON SETSCREW M10 x 30 LONG	4	KOS 25 531
27	SPRING WASHER M10	4	KOS 28 155
28	HEXAGON SETSCREW M 12 x 70 LONG	2	KOS 25 551
29	PLAIN WASHER M12	2	KOS 28 105
30	SPRING WASHER M12	2	KOS 28 156
31	COACH BOLT M12 x 50 LONG	4	KOS 26 450
32	PLAIN WASHER M12	4	KOS 28 105
33	SPRING WASHER M12	4	KOS 28 156.
34	NUT M12	4	KOS 27 104
35	HEXAGON SETSCREW M10 x 35 LONG	3	KOS 25 532
36	SPRING WASHER M10	3	KOS 28 155

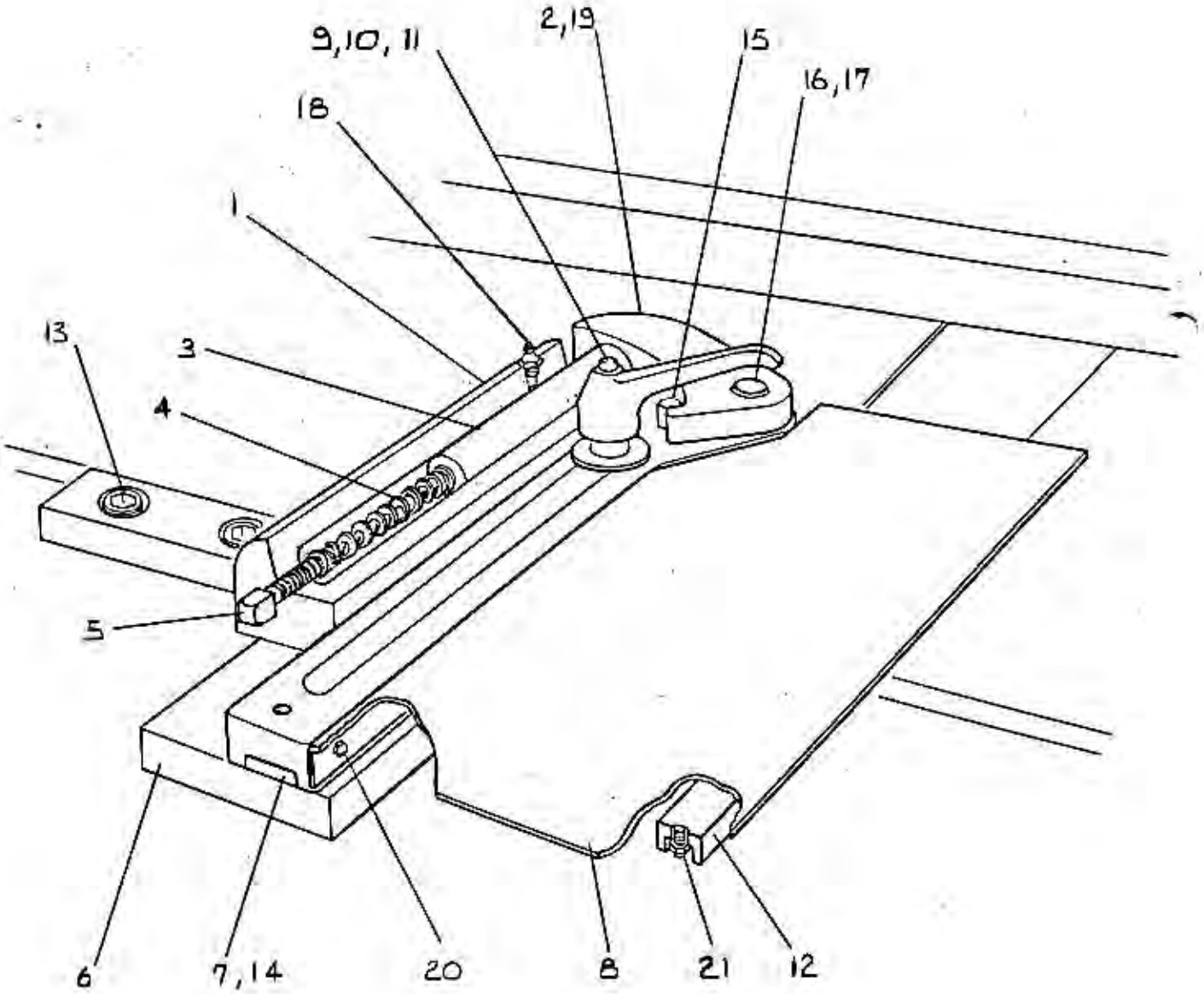

17. SPRING SIDE PRESSURE
AFTER 1ST BOTTOM HEAD

17. SPRING SIDE PRESSURE AFTER 1ST BOTTOM HEAD

REF N°	DESCRIPTION	N° OFF
1	SIDE PRESSURE BRACKET	1 MX152
2	ROLLER LINK	1 FB 2591
3	PLUNGER	1 FB 2592
4	SPRING	1 FB 2314
5	TENSION SCREW	1 FB 2258
6	SUPPORT BRACKET	1 MX 425
7	TENON	1 MX 414
8	GUARD OVER 1ST BOTTOM HEAD	1 MX 405
9	STUD M12 X 60 LG	1
10	LARGE PLAIN WASHER M12	1
11	FEMALE BRISTOL HANDLE M12	1
12	SUPPORT STRIP	1 MX 404
13	HEXAGON SOCKET CAP SCREW M12 X 25 LG	3
14	HEXAGON SOCKET COUNTER SUNK SCREW M8 X 25 LG	2
15	PLAIN DOWEL Ø12 X 40 LG	1
16	BRONZE BUSH 25 X 20 X 15	1
17	PIVOT PIN	1 FB 2593
18	GREASE NIPPLE 1/8" B.S.P	1
19	TAPER PIN	1
20	HEXAG HEAD SETSCREW M16 X 12	3
21	HEXAGON LOCKNUT M6	3

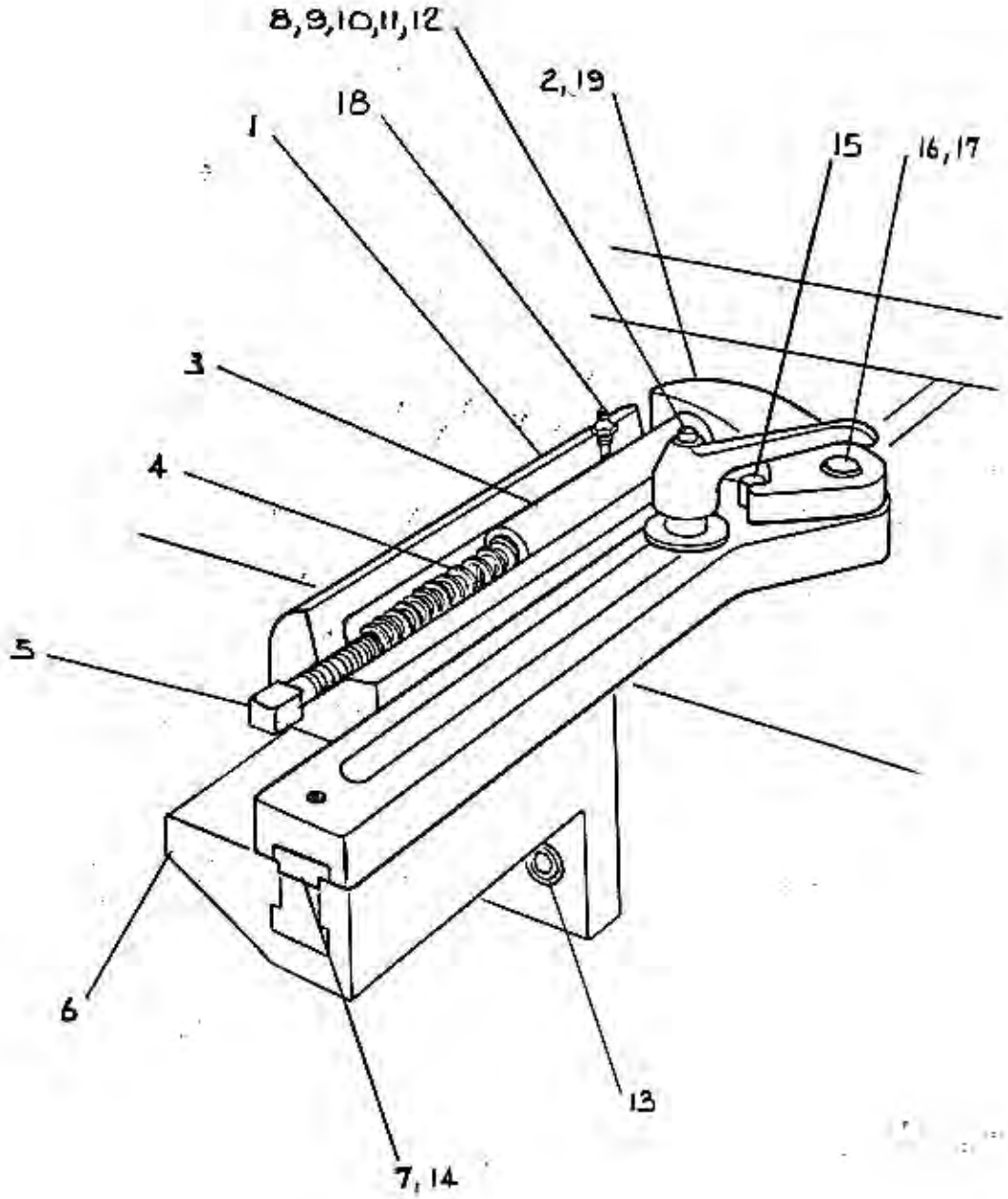

18. SPRING INFEED SIDE PRESSURE

18 SPRING INFEED SIDE PRESSURE

REF N°	DESCRIPTION	N° OFF
1	SIDE PRESSURE BRACKET	1 FB 14733
2	ROLLER LINK	1 FB 2591
3	PLUNGER	1 FB 2592
4	SPRING	1 FB 2514
5	TENSION SCREW	1 FB 2258
6	SUPPORT BRACKET	1 M3016002
7	TEE SLIDE	1 M1 4440
8	BLOCK FOR TEE BOLT	1 M1 482
9	STUD M12 X 70 LG	1 K0526300
10	LARGE PLAIN WASHER M12	1 K0528114
11	FEMALE BRISTOL HANDLE M12	1 K3029904
12	TENSION PIN 4 x 26 LG	1 K0520484
13	HEXAGON SOCKET CAP SCREW M10 X 25 LG	2 K0525209
14	HEXAGON SOCKET CAPSCREW M10 X 16 LG	2
15	PLAIN DOWEL Ø12 X 40 LG	1 K0529173
16	BRONZE BUSH 25 x 20 x 15	1 K0531540
17	PIVOT PIN	1 FB 2593
18	GREASE NIPPLE 1/8 B.S.P	1
19	TAPER PIN	1 K0520507

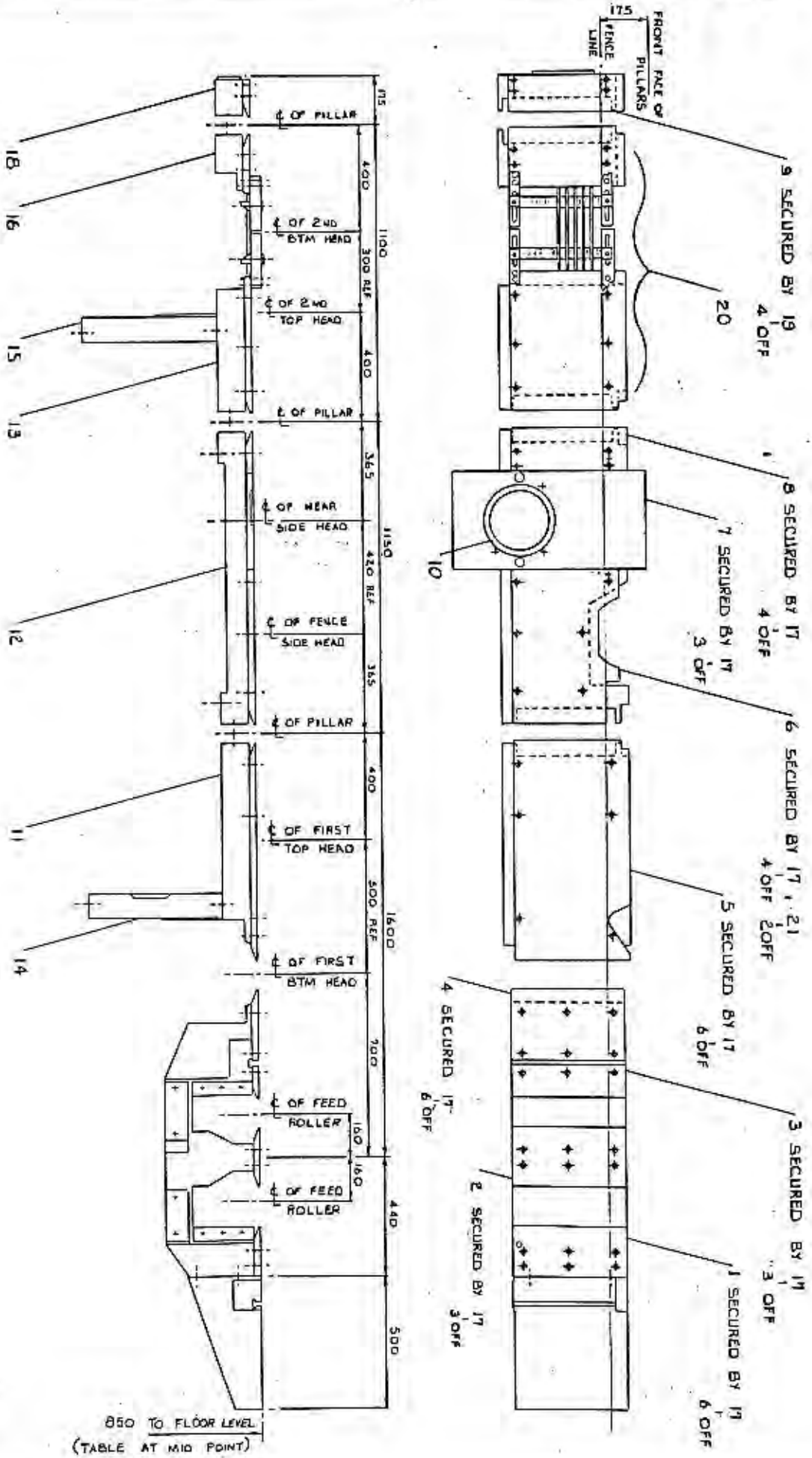

19. BED PLATES AND TABLES

19 BED PLATES AND TABLES

REF	DESCRIPTION	N° OFF
1	BEDPLATE BEFORE FEED ROLLS	1 M3006C100
2	BEDPLATE BETWEEN FEED ROLLS	1 M3006C101
3	BED PLATE AFTER FEED ROLLS	1 M3006C102
4	BED PLATE BEFORE FIRST BOTTOM HEAD	1 M3006C103
5	BED PLATE UNDER FIRST TOP HEAD	1 MX285
6	FENCE SIDE HEAD BEDPLATE REPLACED BY MX282 IF NOT IN STOCK	1 M3006C105
7	NEAR SIDE HEAD BEDPLATE	1 M3006C106
8	BEDPLATE AFTER NEAR SIDE HEAD	1 M3006C107
9	OUT FEED BED PLATE	1 MX18
10	INNER RING	1 MX599
11	INFEED END TABLE SECTION	1 MX207
12	INTERMEDIATE TABLE SECTION	1 M2306002
13	TABLE UNDER SECOND TOP HEAD	1 M2306003
14	TABLE SUPPORT	1 M2306F002
15	TABLE SUPPORT	1 M2306005
16	TABLE AFTER SECOND BOTTOM HEAD	1 MX136
17	HEXAGON SOCKET CAP SCREW M10 X 25 LG	26
18	TABLE AFTER LAST BED ROLL	1 MX135
19	HEXAGON SOCKET CAP SCREW M12 X 25 LG	4
20	SEE SECTION 20 BED PLATES AND FENCES FOR SPLITTING	
	SEE SECTION 21 BED PLATES AND FENCES FOR MOULDING	
21	SLOTTED SCREW M10	2 M2306114

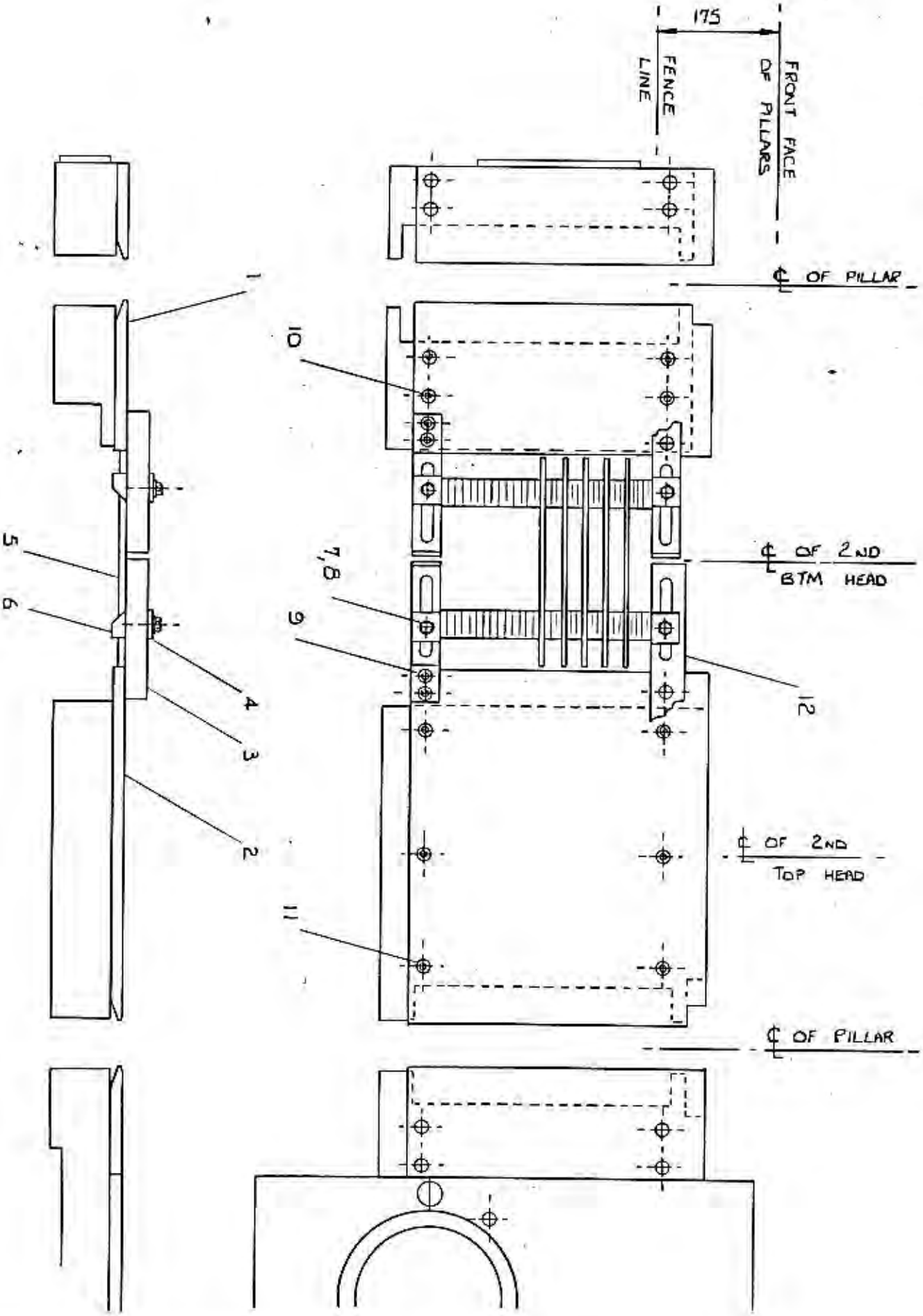
175
FENCE LINE
FRONT FACE OF PILLARS
℄ OF PILLAR
1
10
5
7,8
6
9
4
3
2
12
℄ OF 2ND BTM HEAD
℄ OF 2ND TOP HEAD
11
℄ OF PILLAR

20 BED PLATES AND FENCES FOR SPLITTING

REF	DESCRIPTION	N° OFF
1	BEDPLATE AFTER SECOND BOTTOM HEAD	1 M30 43A101
2	BED PLATE UNDE SECOND TOP HEAD	1 M30 43A100
3	EXTENSION PIECE	2 M23 43 104
4	SERATED LOCKING WASHER	4 M23 43 105
5	TABLE BAR	5 M23 43 103
6	SUPPORT BAR	2 M30 43 102
7	HEXAGON HEAD SETSCREW M12 X 60 LG	4
8	PLAIN WASHER M12	4
9	HEXAGON SOCKET CAPSCREW M10 X 60 LG	4
10	HEXAGON SOCKET CAPSCREW M12 X 25 LG	4
11	HEXAGON SOCKET CAPSCREW M10 X 25 LG	6
12	REFER TO SECTION 22 FENCES	

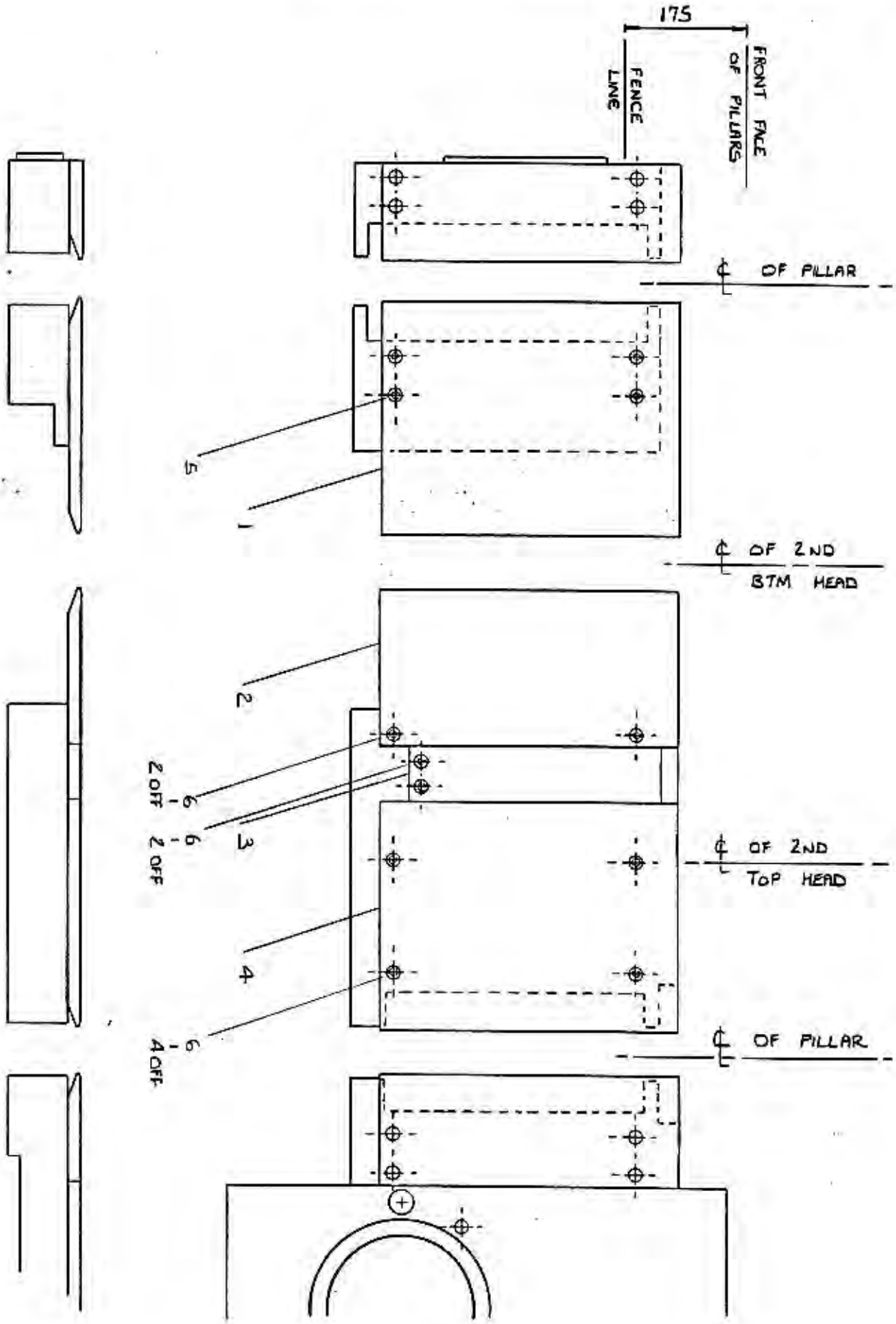
175
FENCE LINE
FRONT FACE OF PILLARS
℄ OF PILLAR
5
1
℄ OF 2ND BTM HEAD
2
6 - 2 OFF
6 - 2 OFF
3
℄ OF 2ND TOP HEAD
4
6 - 4 OFF
℄ OF PILLAR

21 BED PLATES FOR MOULDING

REF	DESCRIPTION	Nº OFF
1	BEDPLATE AFTER SECOND BOTTOM HEAD (LONG)	1 M x 15
	OR BEDPLATE AFTER SECOND BOTTOM HEAD (SHORT)	1 M x 17
2	BEDPLATE AFTER SECOND TOP HEAD (LONG)	1 M x 14
	OR BEDPLATE AFTER SECOND TOP HEAD (SHORT)	1 M x 16
3	BEDPLATE UNDER SECOND TOP HEAD	1 M x 13
4	BEDPLATE BEFORE SECOND TOP HEAD	1 M x 12
5	HEXAGON SOCKET CAP SCREW M12 X 25 LG	4
6	HEXAGON SOCKET CAP SCREW M10 X 25 LG	8

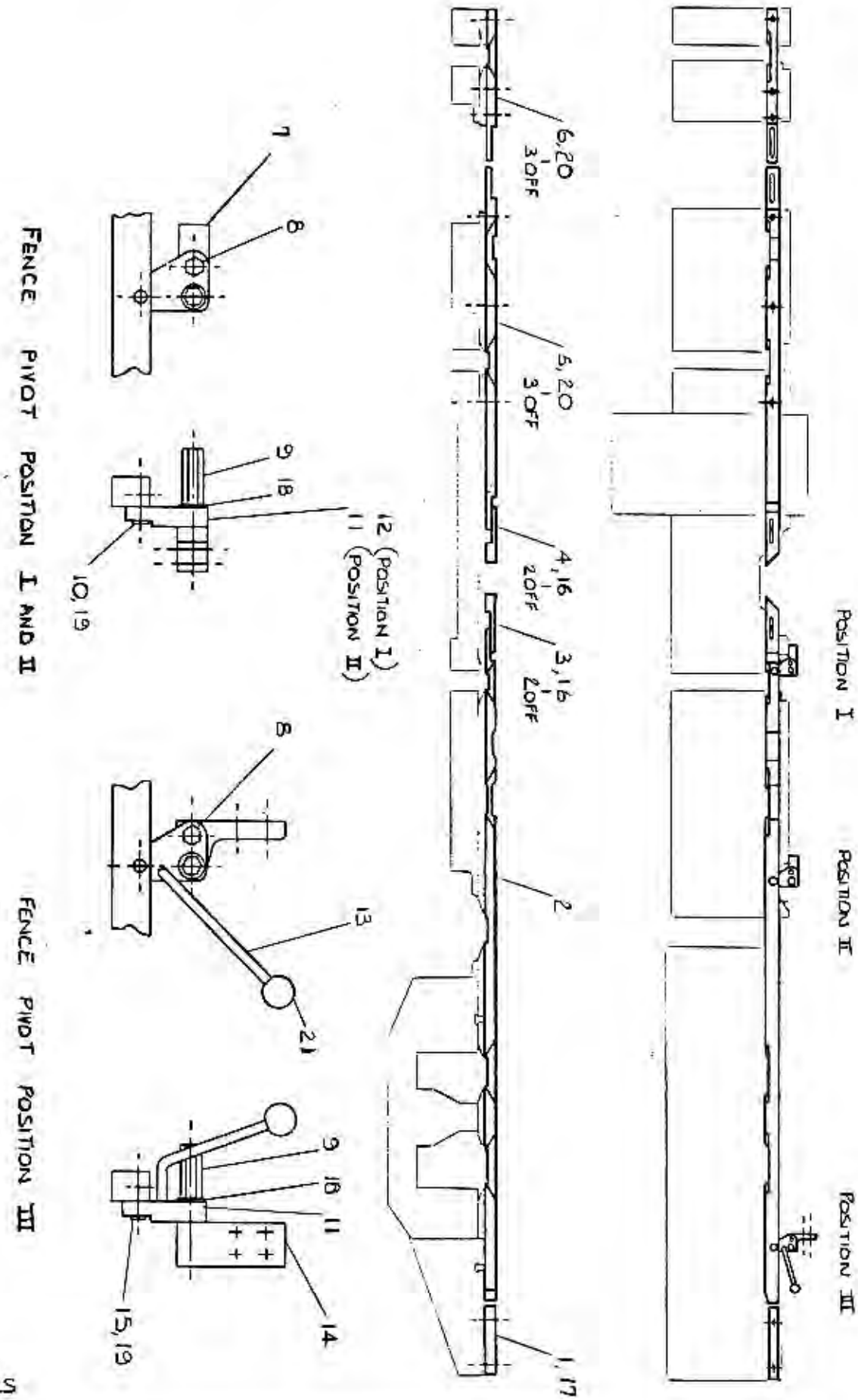
POSITION I
POSITION II
POSITION III
6, 20
1
3 OFF
5, 20
1
3 OFF
4, 16
1
2 OFF
3, 16
1
2 OFF
2
1, 17
7
8
9, 18
10, 19
12 (POSITION I)
11 (POSITION II)
8
13
21
9, 18
11
14
15, 19
FENCE PIVOT POSITION I AND II
FENCE PIVOT POSITION III

22. FENCES

22 FENCES

REF	DESCRIPTION	Nº OFF
1	FIXED INFEED FENCE	1 M23 14 100
2	ADJUSTABLE INFEED FENCE	1 M23 34C 108
3	LEFT HAND ADJUSTABLE FENCE NOSE PIECE	1 M23 14 115B
4	RIGHT HAND ADJUSTABLE FENCE NOSE PIECE	1 M23 14 116B
5	FIXED INTERMEDIATE FENCE	1 M23 14 102
6	FIXED OUTFEED FENCE	1 M23 14 103
7	PIVOT BRACKET FOR ADJUSTABLE FENCE QUADRANT	2 M23 14 114
8	FENCE QUADRANT SCREW	3 M23 14 110
9	CLAMP SCREW FOR QUADRANT	3 M23 14 109A
10	PIVOT PIN FOR FENCE QUADRANT	2 M23 14 112
11	FENCE QUADRANT	2 MX525
12	FENCE QUADRANT	1 MX524
13	ADJUSTMENT LEVER FOR FENCE	1 M23 14 108
14	PIVOT BRACKET FOR ADJUSTABLE FENCE QUADRANT	1 M23 14 001
15	PIVOT PIN FOR FENCE QUADRANT	1 M23 14 107
16	HEXAGON SOCKET CAP SCREW M10 x 20 LG	4
17	HEXAGON SOCKET CAP SCREW M10 X 30 LG	2
18	BELLEVILLE SPRING DISC WASHER	3 FSW 10449
19	HEXAGON SOCKET GRUBSCREW M6 X 6LG	3
20	HEXAGON SOCKET CAP SCREW M12 X 35 LG	6
21	BALL KNOB M12	1 KOS30.307

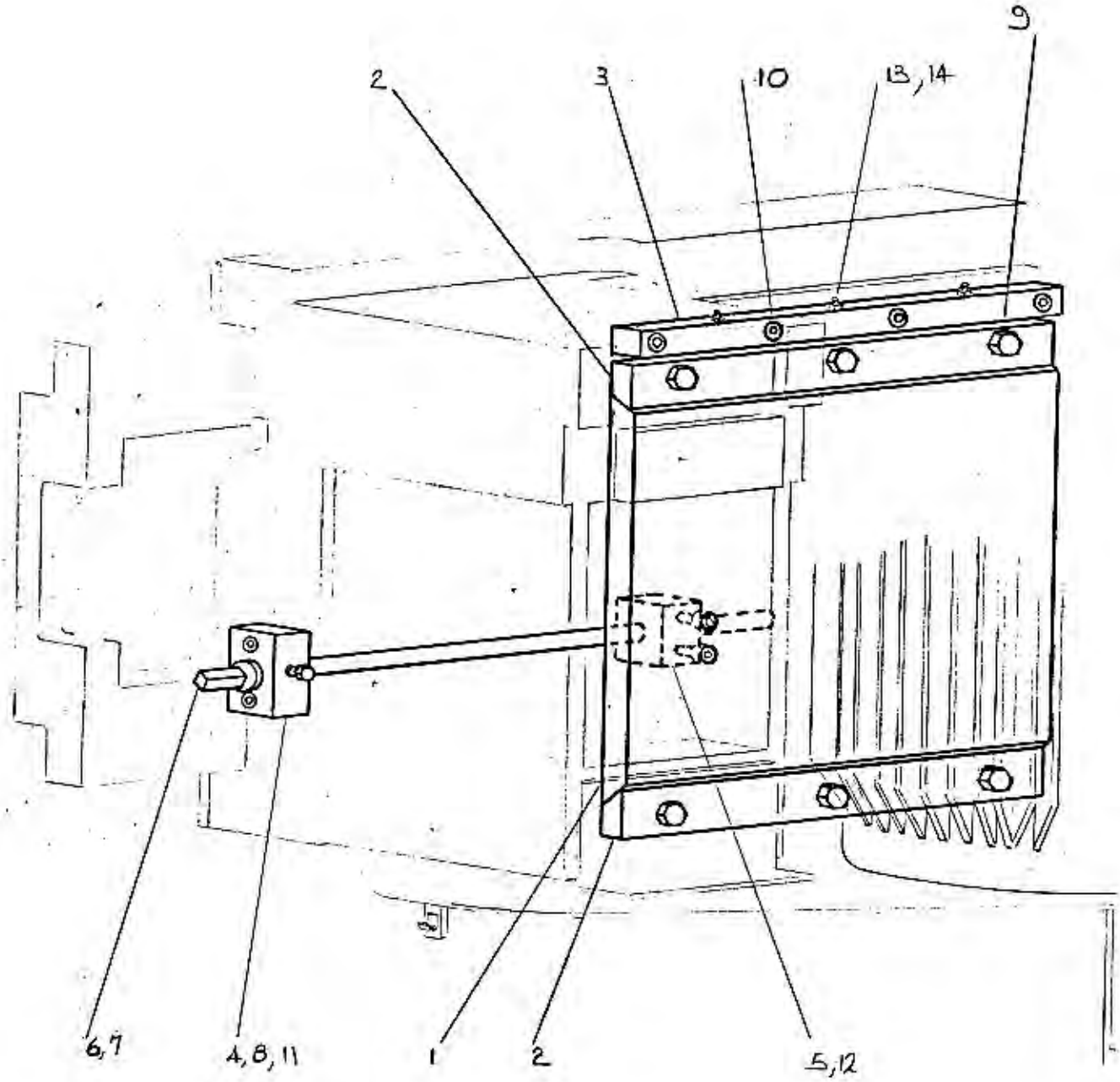

23. SIDE HEAD MOTOR ADJUSTEMENT

23 SIDE HEAD MOTOR ADJUSTEMENT

REF N°	DESCRIPTION	N° OFF
1	MOTOR MOUNTING PLATE	1 M23/2 110A
2	KEEP PLATE FOR MOTOR TRAVERSE	2 M23/2 109
3	SIDE HEAD MOTOR BUTTING SCREW BAR	1 M23/2 108
4	TRAVERSE SCREW LOCATING BLOCK	1 M23/2 112
5	NUT FOR TRAVERSING SCREW	1 M23/2 113
6	TRAVESING SCREW	1 M23/2 111A
7	COLLAR 16 I/D , 28 O/D	1
8	HEXAGON HEAD SET SCREW M8 X 12 LG	1
9	HEXAGON HEAD SET SCREW M10 X 30 LG	6
10	HEXAGON SOCKET CAP SCREW M10 X 30 LG	4
11	HEXAGON SOCKET CAPSCREW M10 X 40 LG	2
12	HEXAGON SOCKET CAP SCREW M10 X 30 LG	2
13	HEXAGON SOCKET GRUB SCREW M10 X 40 LG	3
14	HEXAGON LOCK NUT M10	3